V94XX Datasheet

Specifications are subject to change without notice.

© 2021 Vango Technologies, Inc.

This document contains information that is proprietary to Vango Technologies, Inc.

Unauthorized reproduction of this information in whole or in part is strictly prohibited.

Revision History

Date	Version	Description
2021.04.13	V1.0	Initial release.

Vangotech

General Description

The V94XX series is a highly integrated 32bit MCU which is suitable for varies kind of applications. It is integrated with Cortex-M0 MCU, 256KB FLASH, 32KB SRAM, UART, SPI, I2C, LCD, WDT, RTC and electric energy metering module. V94XX series supports a variety of low power consumption working modes and independent power supply of RTC power supply.

Features

- Working voltage: 2.2V ~ 5.5V.

  V9430: 2.2V~3.6V
- Working Current:
  - Normal mode: 1.633 mA @6.5536MHz
  - Idle mode: 0.379 mA @6.5536MHz
  - Sleep mode (LCD active, RTC_PSCA=0, VDD=3.3V, AVCCLDO power down): 9.3μA
  - Sleep mode (LCD inactive, RTC_PSCA=0, VDD=3.3V, AVCCLDO power down): 3.1μA
  - Deep Sleep mode (RTC_PSCA=0, VDD=3.3V, AVCCLDO power down): 2.9μA
  - RTC only mode (RTC_PSCA=0, BATRTC=3.3V): 1.3μA
- Package:
  - LQFP80(V9430)
- Operation Temperature: -40~+85℃
- Storage Temperature: -55~+150℃
- MCU
  - 32 bits Cortex-M0 with maximum 26.2144MHz operation speed.
  - Single cycle multiplier.
  - Standard 2-wires SWD debug interface.
  - 256KB FLASH with write protect, support both IAP and ISP.
  - 32K bytes SRAM with parity check and data retention under sleep mode.
  - 256 bytes SRAM with data retention under deep-sleep mode.
  - Support abort exception detection including FLASH check-sum error, SRAM parity error, memory address error and memory align error.
- Interface Controller
  - Maximum 6 UART controllers with parity check.
  - Each UART TX channel can be coupled with IR carrier for IR transmission.
  - Maximum 2 ISO7816 controllers.
  - Maximum 2 SPI master/slave controllers.
  - Maximum 1 I2C master/slave controller.
  - 4 32 bits timers.
  - 4 16 bits PWM timers.
  - 4 channels DMA controller.
  - 128/192/256 bits AES CODEC.
  - ECC encrypt/decrypt accelerated engine.
  - Dual frame buffer LCD controller
    - ✓ 4COM/6COM/8COM.
    - ✓ 1/3 or 1/4 bias.
    - ✓ Support multi-kinds of scan

frequency.

✓ LCD voltage: The default output is about 3.3V. Adjustment range: 2.7~3.6V, 0.06V per step.

- Watch dog timers with programmable period.
- Support multiple wake-up sources under each mode.
- Maximum 82 GPIOs.
- Maximum 16 GPIOs can be external interrupt and wakeup sources under all modes.

- Analog Controller
  - 16bits ADC with 10Ksps.
  - Maximum 8 external input.
  - ADC supports manual sample mode or auto sample mode.
  - Maximum 2 comparators with single end input or differential input.
  - Embedded 32 KHz and 6.5 MHz RCO.
  - Embedded 2 PLLs.
  - Support external 32.768 KHz crystal or 6.5536MHz crystal (optional).
  - Support crystal absent detect for both 32.768 KHz and 6.5536 MHz crystal.
  - Each clock can be selected to be system clock.
  - Support digital clock divider up-to 1/256.
  - Support low voltage detection with programmable level.
  - Support power-on reset for both AVCC and DVCC.
  - Support two DC input with auto-switch function and voltage detection for each input.
- RTC
  - Support standalone RTC battery input.
  - Support 1ppm RTC manual calibration.
- Metering Features
  - 3 independent oversampling ∑/Δ ADCs:

    one of the ADC (channel A) can measure voltage, the other ADC with multifunction measure current or temperature etc.
  - Highly Metering Accurate:

    Supports the requirements of IEC 62053-21:2020/ IEC 62053-22:2020 and IEC 62053-23:2020.

    Less than 0.1% error in active energy metering over a dynamic range of 5000:1

    Less than 0.2% error in reactive energy metering over a dynamic range of 5000:1

    Less than 0.5% error in current/voltage RMS over a dynamic range of 5000:1.
  - Supports various measurements:
  - DC components of voltage and current signal
  - Total/ fundamental instantaneous/ average current/voltage RMS
  - Total instantaneous/ average active /reactive/apparent power
  - 10 or 12 cycles of total RMS
  - Fundamental instantaneous/average active /reactive/apparent power
  - active/ reactive energy, active/ reactive/ apparent power, Irms, constant value, and fundamental wave are selectable
  - Line frequency and phase
  - Temperature
  - DC signals measurement
  - Software calibration

- Accelerating calibration when weak current is applied.
- Supports detection for over-current, over-voltage, under-current, under-voltage, voltage dip, and voltage swell
- Supports waveform buffer and waveform transmitted by DMA
- Supports active upload for energy accumulation
- Current input: current shunt resistor, CT, Rogowski Coil, Hall cell, and TMR supportive

Vangotech

V94XX series product

	V94XX	V9430
ADC channel	7	7
Tiny ADC channel	2	2
UART	5	4
UART32K	2	2
ISO7816	1	0
SPI	1	1
I2C	1	1
Comparator	2	2
GPIO	74	61
External interrupt IO	13	12
32-bit Timer	4	4
16-bit PWM Timer	4	4
PWM out	4	4
DMA channel	4	4
LCD	68x4，66x6，64x8	56x4，54x6，52x8
FLASH	256KB	256KB
SRAM	32KB	32KB
Package type	-	80-LQFP

Table of Contents

Revision History **1**

General Description **2**

Features **2**

V94XX series product **4**

Table of Contents **5**

Figure List **16**

Table List **19**

1. Electrical Characteristics **31**

1.1. Absolute Maximum Ratings 31
1.2. Normal Operating Voltage 31
1.3. Driving Capability Characteristics 31
1.4. Switching resistance of Power PIN 32
1.5. Power consumption 32
1.6. Embedded Reset and Power Control Block Characteristics 34
1.7. GPIO Characteristics 35
1.8. ADC Characteristics 36
1.9. Comparator Characteristics 37
1.10. Clock and PLL Characteristics 37
1.11. FLASH and SRAM Characteristics 38
1.12. ESR Characteristics of Crystal Oscillator 39
1.13. Stabilization Time of Clock and Wake up Time 39
1.14. ADC Conversion Time 39
1.15. TinyADC Conversion Time 40
1.16. ESD handling ratings 41

2. Pin Assignments **42**

2.1. V9430 Pin Assignments 42
2.2. V94XX Pin Descriptions 43

3. Functional Block Diagram **50**

3.1. Functional Block Diagram 50
3.2. Power System Block Diagram 51
3.3. Clock Block Diagram 53

4. Memory Maps **54**

4.1. Register Location 55
4.1.1. PMU Register Location 55
4.1.2. ANA Register Location 56
4.1.3. RTC Register Location 57
4.1.4. FLASH Register Location 58
4.1.5. GPIO Register Location 59
4.1.6. DMA Register Location 60
4.1.7. UART Register Location 61

4.1.8. UART 32K Register Location 63
4.1.9. ISO7816 Register Location 63
4.1.10. TIMER/PWM Register Location 64
4.1.11. LCD Register Location 65
4.1.12. SPI Register Location 67
4.1.13. I2C Register Location 68
4.1.14. MISC Register Location 68
4.1.15. CRYPT Register Location 69
4.1.16. Info Information Register 69

5. Power system 78
5.1. Register Location 81
5.2. Register Definition 81
5.2.1. ANA_REG5 Register 81
5.2.2. ANA_REG6 Register 81
5.2.3. ANA_REG7 Register 82
5.2.4. ANA_REG8 Register 82
5.2.5. ANA_REG9 Register 82
5.2.6. ANA_REGA Register 83
5.2.7. ANA_REGF Register 83
5.2.8. ANA_CTRL Register 83
5.2.9. ANA_CMPOUT Register 84
5.2.10. ANA_INSTS Register 84
5.2.11. ANA_INTEN Register 85
5.3. 3.3V Regulator Circuit(AVCC) 86
5.4. Digital Power Supply(DVCC) 87
5.5. Power Supervisor 88
5.5.1. VDCIN Supervisor 88
5.5.2. VDD Supervisor 89
5.5.3. AVCC Supervisor 89
5.6. Power Switch 89
5.6.1. Power Switch 1 89
5.6.2. Power Switch 2 89
5.7. Application Note 90

6. Working Model 91
6.1. Introduction 91
6.2. Features 91
6.3. Functional Block Diagram 92
6.4. Register Location 92
6.5. Register Definitions 93
6.5.1. PMU_DSLEEPEN Register 93
6.5.2. PMU_DSLEEPPASS Register 93
6.5.3. PMU_CONTROL Register 94
6.5.4. PMU_STS Register 95
6.5.5. ANA_CTRL Register 96
6.6. Reset 96
6.6.1. External Reset 98
6.6.2. WDT Reset 99

6.6.3. POR Reset 99
6.6.4. M0-soft Reset 99
6.6.5. Wake up from sleep /deep sleep/IDLE 99
6.7. Working Model 103
6.8. Application Note 105
6.8.1. External IO Wake-up 105
6.8.2. Deep-sleep Entry Procedure 106
6.8.3. Sleep Entry Procedure 107
6.8.4. IDLE Entry Procedure 108

7. Clock Controller 109
7.1. Introduction 109
7.2. Block Diagram 110
7.3. Register Location 111
7.4. Feature 111
7.5. Register Definition 112
7.5.1. ANA_REG2 Register 112
7.5.2. ANA_REG3 Register 112
7.5.3. ANA_REG4 Register 112
7.5.4. ANA_REG9 Register 113
7.5.5. ANA_REGB Register 113
7.5.6. ANA_REGC Register 114
7.5.7. ANA_CMPOUT Register 114
7.5.8. PMU_CONTROL Register 114
7.5.9. PMU_STS Register 115
7.5.10. MISC2_CLKSEL Register 116
7.5.11. MISC2_CLKDIVH Register 116
7.5.12. MISC2_CLKDIVP Register 117
7.5.13. MISC2_HCLKEN Register 117
7.5.14. MISC2_PCLKEN Register 118

8. Analog Controller 120
8.1. Introduction 120
8.2. Feature 120
8.3. Block Diagram 120
8.4. Register Location 120
8.5. Register Definition 122
8.5.1. ANA_REGx Register 122
8.5.2. ANA_REG1 Register 123
8.5.3. ANA_REG2 Register 123
8.5.4. ANA_REG3 Register 123
8.5.5. ANA_REG4 Register 124
8.5.6. ANA_REG5 Register 124
8.5.7. ANA_REG6 Register 125
8.5.8. ANA_REG7 Register 125
8.5.9. ANA_REG8 Register 126
8.5.10. ANA_REG9 Register 126
8.5.11. ANA_REGA Register 127
8.5.12. ANA_REGB Register 127

8.5.13. ANA_REGC Register 128
8.5.14. ANA_REGF Register 128
8.5.15. ANA_CTRL Register 129
8.5.16. ANA_CMPOUT Register 131
8.5.17. ANA_INSTS Register 132
8.5.18. ANA_INTEN Register 134
8.5.19. ANA_ADCCTRL Register 136
8.5.20. ANA_ADCDATAx Register 138
8.5.21. ANA_CMPCNTx Register 139
8.5.22. ANA_MISC Register 139

9. ADC Controller 140
9.1. Introduction 140
9.2. Feature 140
9.3. Block Diagram 140
9.4. Register Location 141
9.5. Register Definition 141
9.5.1. ANA_REG1 Register 141
9.5.2. ANA_REG3 Register 142
9.5.3. ANA_INSTS Register 142
9.5.4. ANA_INTEN Register 143
9.5.5. ANA_ADCCTRL Register 143
9.5.6. ANA_ADCDATAx Register 146
9.6. Measuring Battery Voltage and External Voltage 146
9.7. Measuring Temperature 149

10. Comparator Controller 151
10.1. Introduction 151
10.2. Feature 151
10.3. Block Diagram 151
10.4. Register Location 152
10.5. Register Definition 152
10.5.1. ANA_REG2 Register 152
10.5.2. ANA_REG3 Register 153
10.5.3. ANA_REG5 Register 153
10.5.4. ANA_CTRL Register 153
10.5.5. ANA_CMPOUT Register 155
10.5.6. ANA_INSTS Register 155
10.5.7. ANA_INTEN Register 155
10.5.8. ANA_CMPCNTx Register 156

11. Tiny ADC Controller 157
11.1. Introduction 157
11.2. Feature 157
11.3. Block Diagram 157
11.4. Register Location 157
11.5. Register Definition 158
11.5.1. ANA_REGF Register 158
11.5.2. ANA_CMPOUT Register 158
11.5.3. ANA_INSTS Register 159

11.5.4. ANA_INTEN Register 159
11.5.5. ANA_MISC Register 159

12. PMU_WDT Unit 161
12.1. Introduction 161
12.2. Features 161
12.3. WDT State in Different Modes 161
12.4. Block Diagram 161
12.5. Register Location 161
12.6. Register Definitions 162
12.6.1. PMU_WDTPASS Register 162
12.6.2. PMU_WDTEN Register 162
12.6.3. PMU_WDTCLR Register 163

13. RTC Controller 164
13.1. Introduction 164
13.2. Feature 164
13.3. Block Diagram 164
13.4. Reading and Writing of RTC Register 165
13.4.1. Writing of RTC 165
13.4.2. Reading of RTC 165
13.5. Register Location 165
13.6. Register Definition 167
13.6.1. RTC_SEC/MIN/DAY/WEEK/MONTH/YEAR Register 167
13.6.2. RTC_WKUSEC Register 168
13.6.3. RTC_WKUMIN Register 169
13.6.4. RTC_WKUHOUR Register 169
13.6.5. RTC_WKUCNT Register 170
13.6.6. RTC_CAL Register 170
13.6.7. RTC_DIV Register 171
13.6.8. RTC_CTL Register 171
13.6.9. RTC_PWD Register 171
13.6.10. RTC_CE Register 172
13.6.11. RTC_LOAD Register 172
13.6.12. RTC_INTSTS Register 173
13.6.13. RTC_INTEN Register 173
13.6.14. RTC_PSCA Register 174
13.6.15. RTC_ACTI Register 175
13.6.16. RTC_ACF200 Register 175
13.6.17. RTC_ACPx Register 175
13.6.18. RTC_ACKx Register 176
13.6.19. RTC_ACKTEMP Register 176
13.6.20. RTC_WKUCNTR Register 176
13.7. Info information register（Related to RTC-Cal） 177
13.8. Application Note 180
13.8.1. Temperature Calibration 180
13.8.2. Frequency Error Calibration 180
13.8.3. RTC Manual Temperature Compensation 181

14. FLASH Controller 183

14.1. Introduction 183
14.2. Feature 183
14.3. Block Diagram 184
14.4. Register Location 184
14.5. Register Definition 185
14.5.1. FLASH_PASS Register 185
14.5.2. FLASH_CTRL Register 185
14.5.3. FLASH_PGADDR Register 186
14.5.4. FLASH_PGDATA Register 186
14.5.5. FLASH_PGBx Register 187
14.5.6. FLASH_PGHWx Register 187
14.5.7. FLASH_SERASE Register 188
14.5.8. FLASH_CERASE Register 188
14.5.9. FLASH_DSTB Register 189
14.5.10. FLASH_INT Register 189
14.5.11. FLASH_CSSADDR Register 189
14.5.12. FLASH_CSEADDR Register 190
14.5.13. FLASH_CSVALUE Register 190
14.5.14. FLASH_CSCVALUE Register 190
14.5.15. FLASH_STS Register 190
14.5.16. MISC2_FLASHWC Register 191

15. GPIO Controller 192
15.1. Introduction 192
15.2. Feature 192
15.3. Block Diagram 192
15.4. Register Location 192
15.5. Register Definition 194
15.5.1. PMU_IOAOEN Register 194
15.5.2. PMU_IOAIE Register 194
15.5.3. PMU_IOADAT Register 195
15.5.4. PMU_IOAATT Register 195
15.5.5. PMU_IOAWKUEN Register 195
15.5.6. PMU_IOASTS Register 196
15.5.7. PMU_IOAINTSTS Register 196
15.5.8. PMU_IOASEL Register 197
15.5.9. PMU_IOANODEG Register 197
15.5.10. IOX_OEN Register 198
15.5.11. IOX_IE Register 198
15.5.12. IOX_DAT Register 198
15.5.13. IOX_ATT Register 199
15.5.14. IOX_STS Register 199
15.5.15. IOB_SEL Register 199
15.5.16. IOE_SEL Register 200
15.5.17. IO_MISC Register 200
15.6. Special Function of IO 201
15.6.1. Special Function of IOA 201
15.6.2. Special Function of IOB 201
15.6.3. Special Function of IOC 202

15.6.4. Special Function of IOD 203
15.6.5. Special Function of IOE 204
15.6.6. Special Function of IOF 204

16. DMA Controller 206
16.1. Introduction 206
16.2. Feature 206
16.3. Block Diagram 207
16.4. Register Location 207
16.5. Register Definition 208
16.5.1. DMA_IE Register 208
16.5.2. DMA_STS Register 209
16.5.3. DMA_CxCTL Register 211
16.5.4. DMA_CxSRC Register 213
16.5.5. DMA_CxDST Register 213
16.5.6. DMA_CxLEN Register 213
16.5.7. DMA_AESCTL Register 214
16.5.8. DMA_AESKEYx Register 214

17. UART Controller 215
17.1. Introduction 215
17.2. Feature 215
17.3. Block Diagram 215
17.4. Register Location 216
17.5. Register Definition 217
17.5.1. UARTx_DATA Register 217
17.5.2. UARTx_STATE Register 217
17.5.3. UARTx_CTRL Register 218
17.5.4. UARTx_INTSTS Register 219
17.5.5. UARTx_BAUDDIV Register 219
17.5.6. UARTx_CTRL2 Register 220
17.5.7. MISC_IREN Register 220
17.5.8. MISC_DUTYL Register 221
17.5.9. MISC_DUTYH Register 221

18. UART 32K Controller 222
18.1. Introduction 222
18.2. Feature 222
18.3. Block Diagram 223
18.4. Register Location 223
18.5. Register Definition 224
18.5.1. U32Kx_CTRL0 Register 224
18.5.2. U32Kx_CTRL1 Register 225
18.5.3. U32Kx_PHASE Register 226
18.5.4. U32Kx_DATA Register 226
18.5.5. U32Kx_STS Register 226

19. ISO7816 Controller 228
19.1. Introduction 228
19.2. Feature 228

19.3. Block Diagram 228
19.4. Register Location 229
19.5. Register Definition 229
19.5.1. ISO7816x_BAUDDIVL Register 229
19.5.2. ISO7816x_BAUDDIVH Register 229
19.5.3. ISO7816x_DATA Register 230
19.5.4. ISO7816x_INFO Register 230
19.5.5. ISO7816x_CFG Register 231
19.5.6. ISO7816x_CLK Register 232

20. Timer/PWM Controller 234
20.1. Introduction 234
20.2. Feature 234
20.3. Block Diagram 234
20.4. Register Location 235
20.5. Register Definition 237
20.5.1. TMRx_CTRL Register 237
20.5.2. TMRx_VALUE Register 237
20.5.3. TMRx_RELOAD Register 238
20.5.4. TMRx_INT Register 238
20.5.5. PWMx_CTL Register 238
20.5.6. PWMx_CCTLx Register 241
20.5.7. PWMx_CCRx Register 244
20.5.8. PWM_O_SEL Register 244

21. LCD Controller 246
21.1. Introduction 246
21.2. Feature 246
21.3. Block Diagram 246
21.4. LCD Timing 247
21.5. LCD Waveform Voltage 247
21.6. LCD Operating Current 247
21.7. LCD Drive Waveform 248
21.8. Register Location 253
21.9. Register Definition 254
21.9.1. LCD_FBx Register 254
21.9.2. LCD_CTRL Register 255
21.9.3. LCD_CTRL2 Register 256
21.9.4. LCD_SEGCTRL0 Register 257
21.9.5. LCD_SEGCTRL1 Register 257
21.9.6. LCD_SEGCTRL2 Register 258
21.9.7. ANA_REG6 Register 258

22. SPI Controller 259
22.1. Introduction 259
22.2. Features 259
22.3. Block Diagram 260
22.4. Register Location 260
22.5. Register Definition 261
22.5.1. SPIx_CTRL Register 261

22.5.2. SPIx_TXSTS Register 263
22.5.3. SPIx_TXDAT Register 264
22.5.4. SPIx_RXSTS Register 265
22.5.5. SPIx_RXDAT Register 266
22.5.6. SPIx_MISC Register 267
22.6. Application Note 268
22.6.1. Master Mode 268
22.6.2. Salve Mode 270
22.6.3. Consecutive Bytes Transfer 271

23. I2C Controller 272
23.1. Introduction 272
23.2. Feature 272
23.3. Block Diagram 273
23.4. Register Location 273
23.5. Register Definition 273
23.5.1. I2C_DATA Register 273
23.5.2. I2C_ADDR Register 274
23.5.3. I2C_CTRL Register 274
23.5.4. I2C_STS Register 276
23.5.5. I2C_CTRL2 Register 283
23.6. Application Notes 283
23.6.1. I2C Bus Protocol: Start/Stop Generation 283
23.6.2. Data Transfer Format 284
23.6.3. ACK Signal Transmission 285
23.6.4. Read-Write Operation 285
23.6.5. Interface Timing 286
23.6.6. The Resolution for SDA Pin Lock-Status 288
23.7. Firmware Flow 289
23.7.1. Master Transmit Mode 289
23.7.2. Master Receive Mode 290
23.7.3. Slave Transmit Mode 291
23.7.4. Slave Receive Mode 292

24. Interrupt Controller 293
24.1. Introduction 293
24.2. Feature 293
24.3. Interrupt Sources 293

25. MISC Controller 297
25.1. Introduction 297
25.2. Feature 297
25.3. Block Diagram 297
25.4. Register Location 298
25.5. Register Definition 298
25.5.1. MISC_SRAMINT Register 298
25.5.2. MISC_SRAMINIT Register 299
25.5.3. MISC_PARERR Register 300
25.5.4. MISC_IREN Register 300
25.5.5. MISC_DUTYL Register 300

25.5.6. MISC_DUTYH Register 301
25.5.7. MISC_IRQLAT Register 301
25.5.8. MISC2_FLASHWC Register 302
25.5.9. MISC2_CLKSEL Register 302
25.5.10. MISC2_CLKDIVH Register 303
25.5.11. MISC2_CLKDIVP Register 303
25.5.12. MISC2_HCLKEN Register 303
25.5.13. MISC2_PCLKEN Register 304

26. CRYPT Controller 306
26.1. Introduction 306
26.2. Feature 306
26.3. Block Diagram 306
26.4. Register Location 307
26.5. Register Definition 307
26.5.1. CRYPT_CTRL Register 307
26.5.2. CRYPT_PTRA Register 308
26.5.3. CRYPT_PTRB Register 308
26.5.4. CRYPT_PTRO Register 309
26.5.5. CRYPT_CARRY Register 309
26.6. Application Note 309
26.6.1. Data Format 309
26.6.2. Operation Detail 310

27. Debug Features 312
27.1. Feature 312
27.2. SWD Port 312

28. Cortex-M0 Core Brief Description 313
28.1. CMSIS Function Specification 313

29. Electric energy metering 315
29.1. Functional Block Diagram 316
29.2. Bandgap circuit 316
29.3. Registers 318
29.3.1. Registers List 318
29.3.2. Analog Control Registers 322
29.3.3. System Control & Status Register 325
29.3.4. Metering Control Registers 342
29.3.5. Metering Data Register 362
29.3.6. Energy Accumulator Register 365
29.3.7. Phase Measurement Register 367
29.3.8. Power-creep Threshold Register 367
29.3.9. Voltage Swell or Dip Threshold Register 368
29.3.10. Fast Detection Threshold Register 368
29.3.11. Waveform Data Register 369
29.3.12. Calibration Register 369
29.3.13. Checksum Register 373
29.4. DSP 375
29.4.1. Overview 375

29.4.2. Features 376
29.4.3. Functional Diagram 376
29.4.4. Application Description 378
29.5. Active Waveform upload and buffer 380
29.5.1. Active Waveform upload 380
29.5.2. Waveform Buffer 382
29.6. Electrical Signal monitoring 383
29.6.1. Zero-crossing Detection 383
29.6.2. Voltage Swell/Dip 384
29.6.3. Over-voltage and under-voltage/Over-current and under-current 384
29.7. Energy Accumulator 386
29.7.1. High-speed Energy Accumulator 387
29.7.2. Low-speed Energy Accumulator 387
29.7.3. CF Output 388
29.7.4. Energy Accumulator Power-creep Detection 388
29.7.5. Active Accumulation uploading Interface 388
29.8. Signal IO Ports 389
29.8.1. Overview 389
29.8.2. Functional Description 389

30. Outline Dimensions 391
30.1. Outline Dimensions_V9430 391

Figure List

Figure 3-1 V94XX Functional Block Diagram 50
Figure 3-2 V94XX Power System Block Diagram 51
Figure 3-3 V9430 Power System Block Diagram 52
Figure 3-4 V94XX Clock Block Diagram 53
Figure 4-1 V94XX Memory Maps 54
Figure 5-1 V94XX Power System Block Diagram 79
Figure 5-2 V9430 Power System Block Diagram 80
Figure 5-3 AVCCLDO Output and VDD Power Input 87
Figure 5-4 AVCCLDO Output and The Load Current 87
Figure 5-5 DVCCLDO Output and VDD Power Input 88
Figure 5-6 DVCCLDO Output and The Load Current 88
Figure 5-7 Relation Between VDCIN Input Signal and States of Flag Bits VDCINDROP 89
Figure 6-1 Functional Block Diagram of PMU Controller 92
Figure 6-2 External Reset De-glitch Timing 99
Figure 6-3 Power State Flow Chart of V94XX 103
Figure 6-4 External Wake-up Example 105
Figure 6-5 Deep-sleep Mode Entry Flow 106
Figure 6-6 Sleep Mode Entry Flow 107
Figure 6-7 IDLE Mode Entry Flow 108
Figure 7-1 V94XX Clock Block Diagram 110
Figure 8-1 Functional Block Diagram of Analog Controller 120
Figure 9-1 ADC Architecture 140
Figure 10-1 hysteresis Window of CMP Controller 151
Figure 10-2 Functional Block Diagram of CMP Controller 151
Figure 11-1 Functional Block Diagram of Analog Controller 157
Figure 13-1 Functional Block Diagram of RTC Controller 165
Figure 13-2 RTC Manual Temperature Compensation Flow Chart 182
Figure 14-1 Functional Block Diagram of FLASH Controller 184
Figure 15-1 Functional Block Diagram of GPIO Controller 192
Figure 16-1 Functional Block Diagram of DMA Controller 207

Figure 17-1 Functional Block Diagram of UART Controller 215
Figure 18-1 Functional Block Diagram of UART 32K Controller 223
Figure 19-1 Functional Block Diagram of ISO7816 Controller 228
Figure 20-1 Functional Block Diagram of TIMER Controller 234
Figure 20-2 Functional Block Diagram of PWM TIMER Controller 235
Figure 20-3 Mode description of PWM TIMER Controller 240
Figure 20-4 Example of Continuous Mode 241
Figure 20-5 PWM Output under Up-count Mode 243
Figure 20-6 PWM Output under Continuous Mode 243
Figure 20-7 PWM Output under Up/down Count Mode 244
Figure 21-1 Functional Block Diagram of LCD Controller 247
Figure 21-2 LCD Controller Structure Diagram 247
Figure 21-3 LCD Drive Waveform of 1/4 Duty and 1/3 Bias 249
Figure 21-4 LCD Drive Waveform of 1/6 Duty and 1/3 Bias 250
Figure 21-5 LCD Drive Waveform of 1/8 Duty and 1/3 Bias 251
Figure 21-6 LCD Drive Waveform of 1/8 Duty and 1/4 Bias 252
Figure 21-7 Frame buffer operation mode under different FBMODE 257
Figure 22-1 Functional Block Diagram of SPI Controller 260
Figure 22-2Master Mode, SPO = 0, SPH=0 269
Figure 22-3 Master Mode, SPO = 0, SPH=1 269
Figure 22-4 Master Mode, SPO = 1, SPH=0 270
Figure 22-5 Master Mode, SPO = 1, SPH=1 270
Figure 23-1 Functional Block Diagram of I2C Controller 273
Figure 23-2 Start and Stop Conditions 284
Figure 23-3 Write Mode with 7-bits Address 284
Figure 23-4 Read Mode with 7-bits Address 284
Figure 23-5 Data Transfer on The I2C bus 285
Figure 23-6 Acknowledge on The I2C bus 285
Figure 23-7 I2C Bus Connection Example 286
Figure 23-8 Timing on the SCL and SDA 287
Figure 23-9 AC Timing of I2C Controller 288
Figure 23-10 Operations for Master Transmitter Mode 289

Figure 23-11 Operations for Master Receiver Mode 290

Figure 23-12 Operations for Slave Transmitter Mode 291

Figure 23-13 Operations for Slave Receiver Mode 292

Figure 25-1 Functional Block Diagram of MISC Controller 297

Figure 26-1Functional Block Diagram of CRYPT Controller 306

Figure 29-1 Functional block diagram 316

Figure 29-2 Functional Diagram1 of Metering DSP 376

Figure 29-3 Functional Diagram2 of Metering DSP 377

Figure 29-4 Communication timing of DMA SPI 381

Figure 29-5 output waveform for voltage/current zero-crossing 383

Figure 29-6 Over-voltage and under-voltage/Over-current and under-current detect 384

Figure 29-7 Functional block diagram of energy bucket 386

Figure 29-8 Functional Block Diagram of signal IO ports 390

Table List

Table 1-1 Absolute Maximum Ratings 31
Table 1-2 Operating Voltage 31
Table 1-3 Driving Condition of Power PINs 31
Table 1-4 Switching Resistance of Power PIN 32
Table 1-5 General Operating Conditions 32
Table 1-6 Power Consumption of Each Module 34
Table 1-7 Embedded Reset and Power Control Block Characteristics 34
Table 1-8 Hysteresis Voltage Characteristics 35
Table 1-9 GPIO Characteristics 35
Table 1-10 ADC Characteristics 36
Table 1-11 Comparator Characteristics 37
Table 1-12 Clock and PLL Characteristics 37
Table 1-13 FLASH and SRAM Characteristics 38
Table 1-14 ESR Characteristics of Crystal Oscillator 39
Table 1-15 Stabilization Time of Clock and Wake-up Time 39
Table 1-16 ADC Conversion Time (ADC clock frequency and CIC down sampling rate are variable) 40
Table 1-17 ADC Conversion Time (CIC output skip point number is variable) 40
Table 1-18 TinyADC Conversion Time 40
Table 1-19 ESD handling ratings 41
Table 2-1 V94XX Pin Descriptions 43
Table 4-1 Register Location of the PMU Controller (PMU Base: 0x40014000) 55
Table 4-2 Register Location of the PMU Controller (PMU Retention RAM Base: 0x40014400) 55
Table 4-3 Register Location of ANA Controller (ANA Base: 0x40014200) 56
Table 4-4 Register Location of RTC Controller (RTC Base: 0x40014800) 57
Table 4-5 Register Location of FLASH Controller (FLASH Controller Base: 0x00000000) 58
Table 4-6 Register Location of GPIO Controller (GPIO Base: 0x40000000) 59
Table 4-7 Register Location of DMA Controller (DMA Base: 0x40010000) 60
Table 4-8 Register Location of UART Controller (UART Base: 0x40011800) 61
Table 4-9 Register Location of UART 32K Controller (UART 32K 0 Base: 0x40014100) 63
Table 4-10 Register Location of ISO7816 Controller (ISO7816 Base: 0x40012000) 63

Table 4-11 Register Location of 32b TIMER Controller (32b TIMER Base: 0x40012800) 64

Table 4-12 Register Location of 16b PWM TIMER Controller (16-bit PWM TIMER Base: 0x40012900) 64

Table 4-13 Register Location of LCD Controller (LCD Base: 0x40002000) 65

Table 4-14 Register Location of SPI1 Controller (SPI1 Base: 0x40011000) 67

Table 4-15 Register Location ofSPI2 Controller (SPI2 Base: 0x40015800) 67

Table 4-16 Register Location of I2C Controller (I2C Base: 0x40010800) 68

Table 4-17 Register Location of MISC Controller (MISC Base: 0x40013000) 68

Table 4-18 Register Location of MISC2 Controller (MISC2 Base: 0x40013E00) 68

Table 4-19 Register Location of CRYPT Controller (MISC Base: 0x40006000) 69

Table 4-20 Info Information Register 69

Table 5-1 Register Location of ANA Controller for Power (ANA Base: 0x40014200) 81

Table 5-2 Description of Each Bit in ANA_REG5 for Power 81

Table 5-3 Description of Each Bit in ANA_REG6 for Power 81

Table 5-4 Description of Each Bit in ANA_REG7 for Power 82

Table 5-5 Description of Each Bit in ANA_REG8 for Power 82

Table 5-6 Description of Each Bit in ANA_REG9 for Power 82

Table 5-7 Description of Each Bit in ANA_REGA for Power 83

Table 5-8 Description of Each Bit in ANA_REGF for Power 83

Table 5-9 Description of ANA_CTRL Register for Power 83

Table 5-10 Description of ANA_CMPOUT Register for Power 84

Table 5-11 Description of ANA_INTSTS Register for Power 84

Table 5-12 Description of ANA_INTEN Register for Power 85

Table 6-1 Working model Register Location of the PMU Controller (PMU Base: 0x40014000) 92

Table 6-2 working model Register Location of the PMU Retention RAM (PMU Retention RAM Base: 0x40014400) 92

Table 6-3 Register Location of ANA Controller for Working Mode (ANA Base: 0x40014200) 93

Table 6-4 Description of PMU_DSLEEPEN Register 93

Table 6-5 Description of PMU_DSLEEPPASS Register 93

Table 6-6 Description of PMU_CONTROL Register 94

Table 6-7 Description of PMU_STS Register 95

Table 6-8 Description of ANA_CTRL Register 96

Table 6-9 Reset of Each Module under Different Events 96
Table 6-10 Clock Source Enable or Disable in Different Modes 98
Table 6-11 Interrupt Sources 99
Table 6-12 Wake-up Source under Each Mode 104
Table 7-1 Clock Source Enable or Disable in Different Modes 109
Table 7-2 Register Location of ANA Controller for CLOCK (ANA Base: 0x40014200) 111
Table 7-3 Register Location of the PMU Controller (PMU Base: 0x40014000) 111
Table 7-4 Register Location of MISC2 Controller (MISC2 Base: 0x40013E00) 111
Table 7-5 Description of ANA_REG2 112
Table 7-6 Description of ANA_REG3 112
Table 7-7 Description of ANA_REG2 112
Table 7-8 Description of ANA_REG9 113
Table 7-9 Description of ANA_REGB 113
Table 7-10 Description of ANA_REGC 114
Table 7-11 Description of ANA_CMPOUT Register 114
Table 7-12 Description of PMU_CONTROL Register 114
Table 7-13 Description of PMU_STS Register 115
Table 7-14 Description of MISC2_CLKSEL Register 116
Table 7-15 Description of MISC2_CLKDIVH Register 116
Table 7-16 Description of MISC2_CLKDIVP Register 117
Table 7-17 Description of MISC2_HCLKEN Register 117
Table 7-18 HCLK clock enable of each module 117
Table 7-19 Description of MISC2_PCLKEN Register 118
Table 7-20 PCLK Clock Enable of Each Module 118
Table 8-1 Register Location of ANA Controller (ANA Base: 0x40014200) 120
Table 8-2 Description of ANA_REGx 122
Table 8-3 Description of each bit in ANA_REG1 123
Table 8-4 Description of each bit in ANA_REG2 123
Table 8-5 Description of each bit in ANA_REG3 123
Table 8-6 Description of each bit in ANA_REG4 124
Table 8-7 Description of each bit in ANA_REG5 124
Table 8-8 Description of each bit in ANA_REG6 125

Table 8-9 Description of each bit in ANA_REG7 125
Table 8-10 Description of each bit in ANA_REG8 126
Table 8-11 Description of each bit in ANA_REG9 126
Table 8-12 Description of each bit in ANA_REGA 127
Table 8-13 Description of each bit in ANA_REGB 127
Table 8-14 Description of each bit in ANA_REGC 128
Table 8-15 Description of each bit in ANA_REGF 128
Table 8-16 Description of ANA_CTRL Register 129
Table 8-17 Description of ANA_CMPOUT Register 131
Table 8-18 Description of ANA_INTSTS Register 132
Table 8-19 Description of ANA_INTEN Register 134
Table 8-20 Description of ANA_ADCCTRL Register 136
Table 8-21 Description of ANA_ADCDATAx Register 138
Table 8-22 Description of ANA_CMPCNTx Register 139
Table 8-23 Description of ANA_MISC Register 139
Table 9-1 Register Location of ANA Controller for ADC (ANA Base: 0x40014200) 141
Table 9-2 Description of each bit in ANA_REG1 of ADC 141
Table 9-3 Description of each bit in ANA_REG3 of ADC 142
Table 9-4 Description of ANA_INTSTS Register for ADC 142
Table 9-5 Description of ANA_INTEN Register for ADC 143
Table 9-6 Description of ANA_ADCCTRL Register 143
Table 9-7 The ADC Sampling Channels 146
Table 9-8 Description of ANA_ADCDATAx Register 146
Table 9-9 Voltage measurement range and formula 147
Table 10-1 Register Location of ANA Controller for CMP (ANA Base: 0x40014200) 152
Table 10-2 Description of each bit in ANA_REG2 for CMP 152
Table 10-3 Description of each bit in ANA_REG3 for CMP 153
Table 10-4 Description of each bit in ANA_REG5 for CMP 153
Table 10-5 Description of ANA_CTRL Register for CMP 153
Table 10-6 Description of ANA_CMPOUT Register for CMP 155
Table 10-7 Description of ANA_INTSTS Register for CMP 155
Table 10-8 Description of ANA_INTEN Register for CMP 155

Table 10-9 Description of ANA_CMPCNTx Register 156
Table 11-1 Register Location of ANA Controller for TADC(ANA Base: 0x40014200) 157
Table 11-2 Description of each bit in ANA_REGF for TADC 158
Table 11-3 Description of ANA_CMPOUT Register for TADC 158
Table 11-4 Description of ANA_INTSTS Register for TADC 159
Table 11-5 Description of ANA_INTEN Register for TADC 159
Table 11-6 Description of ANA_MISC Register 159
Table 12-1 WDT Enable or Disable in Different Modes (MODE=1) 161
Table 12-2 Register Location of the PMU_WDT Controller (PMU Base: 0x40014000) 161
Table 12-3 Description of PMU_WDTPASS Register 162
Table 12-4 Description of PMU_WDTEN Register 162
Table 12-5 Description of PMU_WDTCLR Register 163
Table 13-1 Register Location of RTC Controller (RTC Base: 0x40014800) 166
Table 13-2 Description of RTC_SEC/MIN/DAY/WEEK/MONTH/YEAR Register 168
Table 13-3 Description of RTC_WKUSEC Register 168
Table 13-4 Description of RTC_WKUMIN Register 169
Table 13-5 Description of RTC_WKUHOUR Register 169
Table 13-6 Description of RTC_WKUCNT Register 170
Table 13-7 Description of RTC_CAL Register 170
Table 13-8 Description of RTC_DIV Register 171
Table 13-9 Description of RTC_CTL Register 171
Table 13-10 Description of RTC_PWD Register 171
Table 13-11 Description of RTC_CE Register 172
Table 13-12 Description of RTC_LOAD Register 172
Table 13-13 Description of RTC_INTSTS Register 173
Table 13-14 Description of RTC_INTEN Register 173
Table 13-15 Description of RTC_PSCA Register 174
Table 13-16 Description of RTC_ACTI Register 175
Table 13-17 Description of RTC_ACF200 Register 175
Table 13-18 Description of RTC_ACPx Register 175
Table 13-19 Description of RTC_ACKx Register 176
Table 13-20 Description of RTC_ACKTEMP Register 176

Table 13-21 Description of RTC_WKUCNTR Register 176
Table 13-22 Info Information Register (Related to RTC-Cal) 177
Table 14-1 Register Location of FLASH Controller (FLASH Controller Base: 0x00000000) 184
Table 14-2 Register Location of MISC2 Controller for FLASH (MISC2 Base: 0x40013E00) 185
Table 14-3 Description of FLASH_PASS Register 185
Table 14-4 Description of FLASH_CTRL Register 185
Table 14-5 Description of FLASH_PGADDR Register 186
Table 14-6 Description of PGADDR and Write Data Port under Different Mode 186
Table 14-7 Description of FLASH_PGDATA Register 186
Table 14-8 Description of FLASH_PGBx Register 187
Table 14-9 Description of FLASH_PGHWx Register 187
Table 14-10 Description of FLASH_SERASE Register 188
Table 14-11 Description of FLASH_CERASE Register 188
Table 14-12 Description of FLASH_DSTB Register 189
Table 14-13 Description of FLASH_INT Register 189
Table 14-14 Description of FLASH_CSSADDR Register 189
Table 14-15 Description of FLASH_CSEADDR Register 190
Table 14-16 Description of FLASH_CSVALUE Register 190
Table 14-17 Description of FLASH_CSCVALUE Register 190
Table 14-18 Description of FLASH_STS Register 190
Table 14-19 Description of MISC2_FLASHWC Register 191
Table 15-1 Register Location of the PMU_IOA Controller for GPIO(PMU Base: 0x40014000) 192
Table 15-2 Register Location of GPIO Controller (GPIO Base: 0x40000000) 193
Table 15-3 Description of PMU_IOAOEN Register 194
Table 15-4 Description of PMU_IOAIE Register 194
Table 15-5 Description of PMU_IOADAT Register 195
Table 15-6 Description of PMU_IOAATT Register 195
Table 15-7 IO Status under Different Kind of Setting 195
Table 15-8 Description of PMU_IOAWKUEN Register 195
Table 15-9 Description of each IO wake-up mode 196
Table 15-10 Description of PMU_IOASTS Register 196
Table 15-11 Description of PMU_IOAINTSTS Register 196

Table 15-12 Description of PMU_IOASEL Register 197
Table 15-13 Description of PMU_IOANODEG Register 197
Table 15-14 Description of IOX_OEN Register 198
Table 15-15 Description of IOX_IE Register 198
Table 15-16 Description of IOX_DAT Register 198
Table 15-17 Description of IOX_ATT Register 199
Table 15-18 Description of IOX_STS Register 199
Table 15-19 Description of IOB_SEL Register 199
Table 15-20 Description of IOE_SEL Register 200
Table 15-21 Description of IO_MISC Register 200
Table 15-22 Special Function of IOA 201
Table 15-23 Special function of IOB 202
Table 15-24 Special function of IOC 202
Table 15-25 Special function of IOD 203
Table 15-26 Special function of IOE 204
Table 15-27 Special function of IOF 205
Table 16-1 Register Location of DMA Controller (DMA Base: 0x40010000) 207
Table 16-2 Description of DMA_IE Register 208
Table 16-3 Description of DMA_STS Register 209
Table 16-4 Description of DMA_CxCTL Register 211
Table 16-5 DMA Source Selection 212
Table 16-6 Description of DMA_CxSRC Register 213
Table 16-7 Description of DMA_CxDST Register 213
Table 16-8 Description of DMA_CxLEN Register 213
Table 16-9 Description of DMA_AESCTL Register 214
Table 16-10 Description of DMA_AESKEYx Register 214
Table 17-1 Register Location of UART Controller (UART Base: 0x40011800) 216
Table 17-2 Register Location of MISC Controller for UART(MISC Base: 0x40013000) 217
Table 17-3 Description of UARTx_DATA Register 217
Table 17-4 Description of UARTx_STATE Register 217
Table 17-5 Description of UARTx_CTRL Register 218
Table 17-6 Description of UARTx_INTSTS Register 219

Table 17-7 Description of UARTx_BAUDDIV Register 219
Table 17-8 Description of UARTx_CTRL2 Register 220
Table 17-9 Description of MISC_IREN Register 220
Table 17-10 Description of MISC_DUTYL Register 221
Table 17-11 Description of MISC_DUTYH Register 221
Table 18-1 Register Location of UART 32K Controller (UART 32K 0 Base: 0x40014100) 223
Table 18-2 Description of U32Kx_CTRL0 Register 224
Table 18-3 Description of U32Kx_CTRL1 Register 225
Table 18-4 Description of U32Kx_PHASE Register 226
Table 18-5 Description of U32Kx_DATA Register 226
Table 18-6 Description of U32Kx_STS Register 226
Table 19-1 Register Location of ISO7816 Controller (ISO7816 Base: 0x40012000) 229
Table 19-2 Description of ISO7816x_BAUDDIVL Register 229
Table 19-3 Description of ISO7816x_BAUDDIVH Register 229
Table 19-4 Description of ISO7816x_DATA Register 230
Table 19-5 Description of ISO7816x_INFO Register 230
Table 19-6 Description of ISO7816x_CFG Register 231
Table 19-7 Description of ISO7816x_CLK Register 232
Table 19-8 Package format of ISO7816 232
Table 20-1 Register Location of 32b TIMER Controller (32b TIMER Base: 0x40012800) 235
Table 20-2 Register Location of 16b PWM TIMER Controller (16b PWM TIMER Base: 0x40012900) 236
Table 20-3 Description of TMRx_CTRL Register 237
Table 20-4 Description of TMRx_VALUE Register 237
Table 20-5 Description of TMRx_RELOAD Register 238
Table 20-6 Description of TMRx_INT Register 238
Table 20-7 Description of PWMx_CTL Register 238
Table 20-8 Description of PWMx_CCTLx Register 241
Table 20-9 Description of PWMx_CCRx Register 244
Table 20-10 Description of PWM_O_SEL Register 244
Table 21-1 Register Location of ANA Controller for LCD (ANA Base: 0x40014200) 253
Table 21-2 Register Location of LCD Controller (LCD Base: 0x40002000) 253
Table 21-3 Description of LCD_FBx Register 254

Table 21-4 Data arrangement of LCD_FBx 255
Table 21-5 Description of LCD_CTRL Register 255
Table 21-6 Description of LCD_CTRL2 Register 256
Table 21-7 Description of LCD_SEGCTRL0 Register 257
Table 21-8 Description of LCD_SEGCTRL1 Register 257
Table 21-9 Description of LCD_SEGCTRL2 Register 258
Table 21-10 Description of each bit in ANA_REG6 258
Table 22-1 Register Location of SPI1 Controller (SPI1 Base: 0x40011000) 260
Table 22-2 Register Location of SPI2 Controller (SPI2 Base: 0x40015800) 261
Table 22-3 Description of SPIx_CTRL Register 261
Table 22-4 Description of SPIx_TXSTS Register 263
Table 22-5 Description of SPIx_TXDAT Register 264
Table 22-6 Description of SPIx_RXSTS Register 265
Table 22-7 Description of SPIx_RXDAT Register 267
Table 22-8 Description of SPIx_MISC Register 267
Table 23-1 Register Location of I2C Controller (I2C Base: 0x40010800) 273
Table 23-2 Description of I2C_DATA Register 273
Table 23-3 Description of I2C_ADDR Register 274
Table 23-4 Description of I2C_CTRL Register 274
Table 23-5 SCL clock speed setting 275
Table 23-6 Description of I2C_STS Register 276
Table 23-7 I2C Status in Master Transmitter Mode 276
Table 23-8 I2C Status in Master Receiver Mode 278
Table 23-9 I2C Status in Slave Receiver Mode 279
Table 23-10 I2C Status in Slave Transmitter Mode 281
Table 23-11 I2C Misc. Status 282
Table 23-12 Description of I2C_CTRL2 Register 283
Table 23-13 I2C AC Characteristics 287
Table 24-1 Interrupt sources 293
Table 25-1 Register Location of MISC Controller (MISC Base: 0x40013000) 298
Table 25-2 Register Location of MISC2 Controller (MISC2 Base: 0x40013E00) 298
Table 25-3 Description of MISC_SRAMINT Register 298

Table 25-4 Description of MISC_SRAMINIT Register 299
Table 25-5 Description of MISC_PARERR Register 300
Table 25-6 Description of MISC_IREN Register 300
Table 25-7 Description of MISC_DUTYL Register 300
Table 25-8 Description of MISC_DUTYH Register 301
Table 25-9 Description of MISC_IRQLAT Register 301
Table 25-10 Description of MISC2_FLASHWC Register 302
Table 25-11 Description of MISC2_CLKSEL Register 302
Table 25-12 Description of MISC2_CLKDIVH Register 303
Table 25-13 Description of MISC2_CLKDIVP Register 303
Table 25-14 Description of MISC2_HCLKEN Register 303
Table 25-15 HCLK Clock Enable of Each Module 304
Table 25-16 Description of MISC2_PCLKEN Register 304
Table 25-17 PCLK clock Enable of Each Module 304
Table 26-1 Register Location of CRYPT Controller(MISC Base: 0x40006000) 307
Table 29-1 Register for Bandgap Circuit 317
Table 29-2 Register list 318
Table 29-3 Analog Control Register 0 (0x00, ANA_CTRL0) 322
Table 29-4 Analog Control Register 1 (0x01, ANA_CTRL1) 323
Table 29-5 UART transmitting data 1bit count value (0x70, SYS_BAUDCNT1) 326
Table 29-6 UART receiving data 8bit count value (0x71, SYS_BAUDCNT8) 326
Table 29-7 System Interrupt Register (0x72, SYS_INTSTS) 326
Table 29-8 System Interrupt Enable Register (0x73, SYS_INTEN) 331
Table 29-9 System Status Register (0x74, SYS_STS) 333
Table 29-10 System Control Register (0x75, SYS_MISC) 337
Table 29-11 Block-reading Address Register 0 (0x79, SYS_BLK0_ADDR) 338
Table 29-12 Block-reading Address Register 1 (0x7A, SYS_BLK1_ADDR) 338
Table 29-13 Block-reading Address Register 2 (0x7B, SYS_BLK2_ADDR) 338
Table 29-14 Block-reading Address Register 3 (0x7C, SYS_BLK3_ADDR) 338
Table 29-15 IO Configuration Register 0 (0x7D, SYS_IOCFGX0) 339
Table 29-16 P0CFG Bit[5:0] Description 339
Table 29-17 IO Configuration Register 1 (0x7E, SYS_IOCFGX1) 341

Table 29-18 Version Information Register (0x7F, SYS_VERSION) 341
Table 29-19 Metering Control Register 0 (0x02, DSP_CTRL0) 342
Table 29-20 Metering Control Register 2 (0x03, DSP_CTRL1) 346
Table 29-21 Metering Control Register 2 (0x04, DSP_CTRL2) 349
Table 29-22 Metering Control Register 3 (0x05, DSP_CTRL3) 353
Table 29-23 Metering Control Register 4 (0x06, DSP_CTRL4) 357
Table 29-24 Metering Control Register 5 (0x07, DSP_CTRL5) 359
Table 29-25 DC Component Register 362
Table 29-26 Voltage/ Current/ Measurement Signal (M) RMS Register 363
Table 29-27 Active/ Reactive Power Register 364
Table 29-28 Fundamental Wave Channel Instantaneous Register 365
Table 29-29 Fundamental Wave Channel Average Register 365
Table 29-30 Line Frequency Register (0x21, DSP_DAT_FRQ) 365
Table 29-31 Energy Accumulator Register 365
Table 29-32 Phase Measurement Register 367
Table 29-33 Power-creep Threshold Register 367
Table 29-34 Voltage Swell or Dip Threshold Register 368
Table 29-35 Fast detection Threshold Register 368
Table 29-36 Waveform Data Register 369
Table 29-37 DC Bias Setting Register 369
Table 29-38 Voltage/ Current/ Measurement RMS Calibration Register 369
Table 29-39 Total-wave Active/ Reactive Power Calibration Register 370
Table 29-40 Threshold Register 371
Table 29-41 Phase Calibration Register (0x33, DSP_CFG_PHC) 372
Table 29-42 Bandpass Filter Register (0x37, DSP_CFG_BPF) 373
Table 29-43 Checksum Register (0x38, DSP_CFG_CKSUM) 373
Table 29-44 Self-checking Register 373
Table 29-45 Phase Calibration Description 378
Table 29-46 Frequency register source FRQ_SEL description 378
Table 29-47 Frequency Constant Description 378
Table 29-48 Active waveform data upload configuration 380
Table 29-49 Active waveform data upload format 381

Table 29-50 waveform buffer data format 382

vangotech

1.Electrical Characteristics

1.1. Absolute Maximum Ratings

Stresses above those listed as "absolute maximum ratings" may cause permanent damage to the device. This is a stress rating only and functional operation of the device under these conditions is not implied. Exposure to maximum rating conditions for extended periods may affect device reliability.

Table 1-1 Absolute Maximum Ratings

Symbol	Ratings	Min	Max	Unit
V_{VDD}-V_{SS}	External supply voltage	-0.3	+5.8	V
V_{IN}-V_{SS}	External signal input to GPIO pins.	-0.3	+5.8	V
Analog Input Voltage	IAP/IAN/IBP/IBN	-0.3	3.3	V
Analog Input Voltage	UP/UN	-0.3	3.3	V
S_{VDD}	IO power-on slope	5V/sec	1V/usec	--
I_{INJ_PAD}	Single pin input injection current	-10	+10	mA
I_{INJ_SUM}	Sum of all input injected current	-50	+40	mA
T_W	Working temperature range	-40	+85	℃
T_S	Storage temperature	-55	+150	℃
T_J	PN junction temperature	-40	+125	℃

1.2. Normal Operating Voltage

Table 1-2 Operating Voltage

Symbol	Parameter	Conditions(-40~+85℃)	Min	Typ	Max	Unit
$V_{IN,VDD}$	Input voltage range of VDD	V94XX	2.2	3.3/5	5.5	V
$V_{IN,VDD}$	Input voltage range of VDD	V9430	2.2	3.3	3.6	V
$V_{IN,BATRTC}$	Input voltage range of BATRTC		2.2	3.3/5	5.5	V

1.3. Driving Capability Characteristics

Table 1-3 Driving Condition of Power PINs

Symbol	Parameter	Conditions(-	Min	Typ	Max	Unit

		40~+85℃)				
$I_{DRV,VDD}$	Driving Capability of VDD				40*[1]	mA
$I_{DRV,AVCC}$	Driving Capability of AVCC				30	mA
$I_{DRV,DVCC}$	Driving Capability of DVCC				35	mA
$I_{DRV,AVCCOUT}$	Driving Capability of AVCC_OUT				20*[2]	mA

*[1]: Driving current of VDD include peripheral loads and loads at AVCC, DVCC and AVCC_OUT.

*[2]: The sum of the driving capability of AVCC pin and AVCC_OUT pin cannot exceed 30mA.

1.4. Switching resistance of Power PIN

Table 1-4 Switching Resistance of Power PIN

Symbol	Parameter	Conditions(-40~+85℃)		Min	Typ	Max	Unit
$R_{on,BATRTC2RTC}$	Switch-on Resistance between BATRTC and RTC module	RTC module powered by BATRTC IL=10μA	3.3V	325	500	675	ohm
			5V	250	400	475	ohm
$R_{on,VDD2RTC}$	Switch-on Resistance between VDD and RTC module	RTC module powered by VDD IL=10μA	3.3V	325	500	675	ohm
			5V	250	400	475	ohm
$R_{on,VDD2AVCC}$	Switch-on Resistance between VDD and AVCC when power down AVCCLDO	VDD=3.3V, IL*<30mA		6.5	7.3	9.0	ohm

*: Load current on AVCC.

1.5. Power consumption

Table 1-5 General Operating Conditions

Symbol	Parameter	Conditions (25 ℃, VDD=3.3V, AVCCLDO power off)	Min	Typ	Max	Unit
I_{ACTIVE}	Active current.	26.2144MHz system clock		5082		μA
		13.1072MHz system clock		2792		
		6.5536MHz system clock		1633		
		3.2768MHz system clock		1016		

		1.6384MHz system clock		713		
		819.2kHz system clock		548		
		409.6kHz system clock		461		
		204.8kHz system clock		418		
		32K RC system clock(FLASH deep-standby)		10.0		
		32K RC system clock(power on FLASH)		75.0		
I_{IDLE}	Idle current.	26.2144MHz system clock		1114		μA
		13.1072MHz system clock		625		
		6.5536MHz system clock		379		
		3.2768MHz system clock		256		
		1.6384MHz system clock		195		
		819.2kHz system clock		164		
		409.6kHz system clock		149		
		204.8kHz system clock		141		
		32K RC system clock		5.1		
I_{SLP1}	Sleep current at LCD off.	RTCCLK no frequency division		3.1 6.3@80℃		μA
		RTCCLK 4 frequency division		2.8		
I_{SLP2}	Sleep current at LCD on.	RTCCLK no frequency division		9.3		μA
		RTCCLK 4 frequency division		9.0		
I_{DSLP}	Deep-sleep current,	RTCCLK no frequency division		2.9		μA
		RTCCLK 4 frequency division		2.6		
$I_{RTCONLY}$	RTC only mode current,	RTCCLK no frequency division		1.3		μA

	BATRTC = 3.3V VDD=0V	RTCCLK 4 frequency division		1.1		

Table 1-6 Power Consumption of Each Module

module	Power consumption(μA)	State (25℃, VDD=3.3V)
CMP 1/2	0.08	IT_CMP=00(Bias current=20nA)
	0.4	IT_CMP=01(Bias current=100nA)
	2	IT_CMP=1*(Bias current=500nA)
BGP	108	
ADC	230	
TinyADC	0.7	
Temp sensor	370	
LCD	5	LCD driving res=600k
	9.9	LCD driving res=300k
	14.5	LCD driving res=200k
	19	LCD driving res=150k
32768 XTAL	0.6	
32K RC	0.2	
6.5M RC	80	
6.5M XTAL	120	
PLL_L	20	
PLL_H	40	
AVCCLDO	1	
Electric energy metering module	2600	IA, IB and U channels work simultaneously.

1.6. Embedded Reset and Power Control Block Characteristics

Table 1-7 Embedded Reset and Power Control Block Characteristics

Symbol	Parameter	Conditions (25℃)	Min	Typ	Max	Unit
t_{RST}	Reset de-bounce time.			20		μS
V_{PORH}	PORH detect voltage		1.955	2.08	2.163	V

	(AVCCLDO).					
V_{PORL}	PORL detect voltage (DVCCLDO).		1.222	1.3	1.352	V
V_{VDCIN}	VDCIN detect level.		1.222	1.3	1.352	V
V_{AVCCLV}	AVCCLV detect level.		2.35	2.5	2.6	V
$V_{VDDALRAM}$	VDD supervisor voltage threshold	V_{TH} configurable, V_{TH}=2.9V;	2.726	2.9	3.016	V
AVCC	AVCC voltage		3.2	3.3	3.4	V
V_{AVCC_Drop}	AVCC voltage drop	I_{OUT}=30mA			200	mV
LCDLDO	LCDLDO voltage		3.2	3.3	3.4	V
V_{LCDLDO_Drop}	LCDLDO voltage drop				20	mV

Table 1-8 Hysteresis Voltage Characteristics

Symbol	Parameter	Conditions (25℃)	Min	Typ	Max	Unit
V_{PORH_HTRES}	PORH detect hysteresis voltage.		53.2	66.5	79.8	mV
V_{PORL_HTRES}	PORL detect hysteresis voltage.		33.6	42.0	50.4	mV
V_{VDCIN_HTRES}	VDCIN detect hysteresis voltage.		33.6	42.0	50.4	mV
V_{AVCCLV_HTRES}	AVCCLV detect hysteresis voltage.		33.6	42.0	50.4	mV
$V_{VDDALRAM_HTRES}$	VDD supervisor hysteresis voltage.	$V_{TH_VDDALARM}$ = 4.5 V	114.0	142.5	171.0	mV
		$V_{TH_VDDALARM}$ = 4.2V	106.4	133.0	159.6	mV
		$V_{TH_VDDALARM}$ = 3.9 V	98.8	123.5	148.2	mV
		$V_{TH_VDDALARM}$ = 3.6V	91.2	114.0	136.8	mV
		$V_{TH_VDDALARM}$ = 3.2 V	81.1	101.4	121.6	mV
		$V_{TH_VDDALARM}$ = 2.9 V	73.5	91.9	110.2	mV
		$V_{TH_VDDALARM}$ = 2.6 V	65.9	82.4	98.8	mV
		$V_{TH_VDDALARM}$ = 2.3 V	58.3	72.9	87.4	mV

1.7. GPIO Characteristics

Table 1-9 GPIO Characteristics

Symbol	Parameter	V_{VDDIO}	Conditions (-40~85	Min	Max	Unit

			℃)			
V_{IH}	Input high voltage	5V		0.7*V_{VDD}		V
		3.3V		2		
V_{IL}	Input low voltage	5V			0.3* V_{VDD}	V
		3.3V			0.3* V_{VDD}	V
V_{HSYS}	Schmitt trigger hysteresis	5V		0.1* V_{VDD}		V
		3.3V				
I_{IH}	Input high current	5V			+1	μA
		3.3V				
I_{IL}	Input low current	5V		-1		μA
		3.3V				
V_{OH}	Output high voltage	5V	11.2mA	V_{VDD} -0.8	V_{VDD}	V
		3.3V	5.6mA	2.4	V_{VDD}	V
V_{OL}	Output low voltage	5V	11.2mA		0.5	V
		3.3V	5.6mA		0.4	V
C_{IN}	Input capacitance	5V			10	pF
		3.3V				

1.8. ADC Characteristics

Table 1-10 ADC Characteristics

Symbol	Parameter	Conditions (25℃)	Min	Typ	Max	Unit
BGPREF	BGP Voltage		1.18	1.2	1.22	V
PSRR	Power Supply Rejection Ratio of BGP			-55		dB
V_{ADC}	ADC operation voltage		2.7	3.3	3.6	V
I_{ADC}	ADC operation current.		170	230	350	μA
f_{ADCLK}	ADC sampling clock.			1.6384		MHz
C_{ADC}	Internal sample and hold capacitance.			1		pF
INL	Integrated non linearity.			2		LSB
DNL	Differential non linearity.			1		LSB
Offset	Offset error			5		mV

$V_{WITHSTAND}$	Withstand voltage (input of ADC Channel)		-0.7		VDD	V

1.9. Comparator Characteristics

Table 1-11 Comparator Characteristics

Symbol	Parameter	Conditions (25℃)	Min	Typ	Max	Unit
V_{CMP}	Comparator operation voltage(AVCC)		2.2	3.3	3.6	V
I_{CMP}	Comparator operation current.	Input bias current 20nA, input 50kHz square wave.		0.08		μA
		Input bias current 100nA, input 50kHz square wave.		0.4		μA
		Input bias current 500nA, input 50kHz square wave.		2		μA
td	Propagation delay	Input bias current 20nA, input 50kHz square wave.		1.6		μS
		Input bias current 100nA, input 50kHz square wave.		0.63		μS
		Input bias current 500nA, input 50kHz square wave.		0.27		μS
V_{CMPIN}	Comparator input voltage range.		0.8		VDD-0.3	V
V_{CMPREF}	Comparator reference voltage	Reference voltage is VREF	1.222	1.3	1.352	V
		Reference voltage is BGPREF	1.18	1.2	1.22	V
V_{HTRES}	Comparator hysteresis voltage		20.0	25.0	30.0	mV

1.10. Clock and PLL Characteristics

Table 1-12 Clock and PLL Characteristics

Symbol	Parameter	Conditions (-40~85℃)	Min	Typ	Max	Unit
V_{DDPLLL}	PLLL operating voltage (DVCC)		1.35	1.5	1.65	V
$I_{VDDPLLL}$	PLLL operating current			30		μA
V_{DDPLLH}	PLLH operating voltage (DVCC)		1.35	1.5	1.65	V

$I_{VDDPLLH}$	PLLH operating current			40		μA
V_{DDRCL}	RCL operating voltage (AVCC)		2.2	3.3	3.6	V
I_{VDDRCL}	RCL operating current			0.2		μA
f_{RCL}	RCL frequency.		29.7	32	35.5	kHz
V_{DDRCH}	RCH operating voltage (AVCC)		2.2	3.3	3.6	V
I_{VDDRCH}	RCH operating current			45		μA
f_{RCH}	RCH frequency.		6.357	6.5	6.75	MHz
V_{DDXOH}	XOH operating voltage (AVCC)		2.2	3.3	3.6	V
I_{VDDXOH}	XOH operating current			150		μA
f_{XOH}	XOH frequency.			6.5536		MHz

1.11. FLASH and SRAM Characteristics

Table 1-13 FLASH and SRAM Characteristics

Parameter	Conditions	Min	Typ	Max	Unit
FLASH word read access time.		38			ns
FLASH program time	-40~85℃	20000			time
FLASH data retention time	-40~85℃	20			year
FLASH byte program time		6		7.5	μS
FLASH page erase time (512 bytes)		4		5	ms
FLASH chip erase time		30		40	ms
FLASH active read current	26MHz access.		2.5	3.5	mA
FLASH active program current				3.5	mA
FLASH active erase current				2	mA
FLASH standby current			80	150	μA
FLASH deep standby current			0.1	6	μA
SRAM data retention voltage (DVCC)	-40~85℃	1.35	1.5	1.65	V

1.12. ESR Characteristics of Crystal Oscillator

Table 1-14 ESR Characteristics of Crystal Oscillator

Parameter	Conditions (-40~85℃)	Min	Typ	Max	Unit
ESR of 6.5536M crystal oscillator				40	Ω
ESR of 32768K crystal oscillator				50	KΩ

*: ESR (Equivalent series resistance)

1.13. Stabilization Time of Clock and Wake up Time

Table 1-15 Stabilization Time of Clock and Wake-up Time

Parameter	Conditions (-40~85℃)	Min	Typ	Max	Unit
PLLL lock time				1	ms
PLLH lock time				15	μS
Stabilization time of RCL				200	μS
Stabilization time of RCH				5	μS
Stabilization time of BGP				10	μS
Wake up time from sleep mode when RCH as system clock			18.4		μS
Wake up time from sleep mode when PLLL as system clock			1.03		mS
Wake up time from sleep mode when PLLH as system clock			22.8		μS
Interrupt response time in IDLE mode when RCH as system clock			6		μS
Interrupt response time in IDLE mode when PLLL as system clock			1.6		μS
Interrupt response time in IDLE mode when PLLH as system clock			1.6		μS

1.14. ADC Conversion Time

ADC clock frequency, CIC down sampling rate and CIC output skip point number influence the ADC conversion time. Please refer the following tables for the details:

Table 1-16 ADC Conversion Time (ADC clock frequency and CIC down sampling rate are variable)

ADCLK/MHz CIC down Sample rate \ ADC Conversion time/ms	6.5536	3.2768	1.6384	0.8192	0.4096
1/512	0.937	0.937	1.875	3.750	7.500
1/256	0.468	0.468	0.937	1.875	3.750
1/128	0.234	0.234	0.468	0.937	1.875
1/64	0.117	0.117	0.234	0.468	0.937

Other parameter configuration: CICSKIP=6, CIC output skip first two points.

Note1: CIC is 3 order filter in this file, the data is stable when the first two sampling points is ignored.

Note2: $T_{ADC_CONVERSION} = \frac{1}{\left(R_{CIC_DownSample} * \frac{f_{ADC}}{2}\right)} * N_{Sample_Point}$ (except ADC clock equal 6.5536MHz).

Example, CIC down sample is 1/512, ADCLK is 3.2768MHz, and skip first two points, then $T_{ADC_CONVERSION} = \frac{1}{\left(\frac{1}{512} * \frac{3.2768MHz}{2}\right)} * 3 = 0.937ms$

Table 1-17 ADC Conversion Time (CIC output skip point number is variable)

Parameter	CIC output skip point number	ADC Conversion time	Unit
MADC conversion time	2	1.875	mS
	3	2.520	mS
	4	3.150	mS
	5	3.780	mS
	6	4.410	mS
	7	5.040	mS

Other parameter configuration: CIC down sample is 1/512, ADCLK is 1.6384MHz

1.15. TinyADC Conversion Time

Table 1-18 TinyADC Conversion Time

Parameter	Conditions	Min	Typ	Max	Unit
TinyADC conversion time			40		μS

1.16. ESD handling ratings

Table 1-19 ESD handling ratings

Parameter	Conditions	Min	Max
HBM	Mil-Std-883J Method 3015.9	-4KV	+4KV
MM	EDEC EIA/JESD22-A115	-300V	+300V
LATCH-UP	JEDEC EIA/JESD78E	-200mA	+200mA

Vangotech

2.Pin Assignments

2.1. V9430 Pin Assignments

2.2. V94XX Pin Descriptions

Table 2-1 V94XX Pin Descriptions

Pin Number		Pin Name	Type	Description
V94XX	V9430			
1	80	EXTRSTN	I	External reset pin, low active. 510k ohm resistor and 0.1uF capacitor are recommended for RC filter circuit.
2	66	AVSS	G	Analog ground
3	1	X4MI	I	Input pin for 6.5536 MHz clock.
4		IOF0	I/O	Default: IOF0 Function 1: 6.5536M crystal input
5		IOF1	I/O	Default: IOF1 Function 1: 6.5536M crystal output
6		IOE4	I/O	Default: IOE4 Function 1: ADC_CH7 input Function 2: SEG63
7	2	IOE5	I/O	Default: VDCIN input. Function 1: ADC_CH8 input Function 2: IOE5 Function 3: SEG62
8	3	IOE6	I/O	Default: IOE6 Function 1: ADC_CH9 input and tiny ADC channel 0 input Function 2: SEG61
9	4	IOE7	I/O	Default: IOE7 Function 1: Comparator 1 output Function 2: ADC_CH11 input and tiny ADC channel 1 input Function 3: SEG60
10	5	IOE8	I/O	Default: IOE8 Function 1: Comparator 1 P input Function 2: SEG59
11	6	IOE9	I/O	Default: IOE9 Function 1: Comparator 1 N input Function 2: SEG58
12	9	X32KO	O	32768 Hz crystal output pin. The internal matching capacitance is 12 pF.
13	10	X32KI	I	32768 Hz crystal input pin
14	7	REF	I/O	On-chip reference voltage.

				This pin must be connected to a 1μF capacitor, and then grounded.
15	8	X32KIN	I	32K CLK input pin (Digital IO interface).
16	11	BATRTC	P	RTC Battery input pin
17	12	AVCC	O/P	AVCC output pin, user should connect a 0.1uF and 10uF de-couple capacitor at this pin.
18	12	VDD	P	Main VDD power input. User should connect a 0.1uF de-couple capacitor at this pin.
19	13	AVSS	G	Analog ground
20	14	VDD	P	Main VDD power input. User should connect a 0.1uF de-couple capacitor at this pin.
21		AVCC_OUT	O	AVCC voltage output pin. This pin has the same electrical level as AVCC, user can be used to drive small power modules.
22	15	DVCC1	O/P	Internal digital power output pin, user should connect a 0.1uF and 10uF de-couple capacitor at this pin.
23		IOE15	I/O	Default: IOE15 Function 2: SEG57
24	16	IOE14	I/O	Default: IOE14 Function 2: SEG56
25	17	IOE13	I/O	Default: IOE13 Function 2: SEG55
26	18	IOA0	I/O	Default: IOA0 (MODE=1), SWCLK(MODE=0) Function 1: EINT0 Function 2: SEG54
27	19	IOA1	I/O	Default: IOA1 (MODE=1), SWDIO(MODE=0) Function 1: EINT1 Function 2: SEG53
28	20	MODE	I	Debug mode or normal mode selection. 0: Debug mode 1: Normal mode The signal level of this pin should be the same as VDD, and the state of this IO should not change during normal or debug operation.
29		IOA2	I/O	Default: IOA2 Function 1: EINT2 Function 2: SEG52 Function 3: P4,CF1/CF2/ single interruption/ all interruption/ automatic data uploads
30	21	IOA3	I/O	Default: IOA3 Function 1: Second pulse output (RTC_PLLDIV output) Function 2: EINT3 Function 3: SEG51

31	22	IOA8	I/O	Default: IOA8 Function 1: EINT8 Function 2: ADC_CH3 input Function 3: SEG50
32	23	IOA9	I/O	Default: IOA9 Function 1: EINT9 Function 2: ADC_CH4 input Function 3: SEG49
33		IOA10	I/O	Default: IOA10 Function 1: EINT10 Function 2: ADC_CH5 input Function 3: SEG48
34	24	IOA11	I/O	Default: IOA11 Function 1: EINT11 Function 2: ADC_CH6 input Function 3: SEG47
35	25	IOB7	I/O	Default: IOB7 Function 1: UART TXD 5 Function 2: SEG46
36	26	DVCC2	O/P	Internal digital power output pin, user should connect a 0.1uF and 10uF de-couple capacitor at this pin.
37	27	IOB1	I/O	Default: IOB1 Function 1: UART RXD 5 Function 3: PLLH divider output Function 4: SEG45
38	28	IOB6	I/O	Default: IOB6 Function 1: UART TXD 4 Function 2: PWM1 In/Out line Function 3: RTCCLK output Function 4: SEG44
39	29	IOB0	I/O	Default: IOB0 Function 1: UART RXD4 Function 2: PWM0 In/Out line Function 3: SEG43
40	30	IOB15	I/O	Default: IOB15 Function 1: Timer external clock input Function 2: SEG42
41	31	IOB14	I/O	Default: IOB14 Function 1: I2C SDA Function 2: PWM3 In/Out line Function 3: SEG41
42	32	IOB13	I/O	Default: IOB13 Function 1: I2C SCL Function 2: PWM2 In/Out line Function 3: SEG40
43		IOB12	I/O	Default: IOB12 Function 1: SPI1 MOSI

				Function 2: SEG39
44		IOB11	I/O	Default: IOB11 Function 1: SPI1 MISO Function 2: SEG38
45		AVSS	G	Analog ground
46		IOB10	I/O	Default: IOB10 Function 1: SPI1 CLK Function 2: SEG37
47	33	IOB9	I/O	Default: IOB9 Function 1: SPI1 CSN Function 2: SEG36
48	34	IOB8	I/O	Default: IOB8 Function 1: SEG35 Function 2: P3, CF1/ CF2/ single interruption/ all interruption/ automatic data uploads
49	35	IOE12	I/O	Default: IOE12 Function 1: SEG34 Function 2: P2, CF1/ CF2/ single interruption/ all interruption/ automatic data uploads
50	36	IOE11	I/O	Default: IOE11 Function 1: SEG33
51	37	IOE10	I/O	Default: IOE10 Function 1: SEG32
52	38	IOC15	I/O	Default: IOC15 Function 1: SEG31
53	39	IOC14	I/O	Default: IOC14 Function 1: SEG30
54	40	IOC13	I/O	Default: IOC13 Function 1: SEG29
55		IOC12	I/O	Default: IOC12 Function 1: SEG28
56		AVSS	G	Analog ground
57		IOC11	I/O	Default: IOE11 Function 1: SEG27
58	41	IOC10	I/O	Default: IOE10 Function 1: SEG26
59	42	IOC9	I/O	Default: IOC9 Function 1: SEG25
60	43	IOC8	I/O	Default: IOC8 Function 1: SEG24
61	44	IOC7	I/O	Default: IOC7 Function 1: SEG23
62	45	IOC6	I/O	Default: IOC6 Function 1: SEG22 Function 2: P1, CF1/ CF2/ single interruption/ all interruption/ automatic data uploads

63	46	IOC5	I/O	Default: IOC5 Function 1: I2C SDA (2) Function 2: SEG21
64	47	IOC4	I/O	Default: IOC4 Function 1: I2C SCL (2) Function 2: SEG20
65	48	IOC3	I/O	Default: IOC3 Function 1: SPI2 MOSI Function 2: SEG19
66	49	IOC2	I/O	Default: IOC2 Function 1: SPI2 MISO Function 2: SEG18
67	50	IOC1	I/O	Default: IOC1 Function 1: SPI2 CLK Function 2: SEG17
68	51	IOC0	I/O	Default: IOC0 Function 1: SPI2 CSN Function 2: SEG16
69		IOA15	I/O	Default: IOA15 Function 1: UART RXD 3 Function 2: ISO7816 I/O1 Function 3: EINT15 Function 4: SEG15 Function 5: P0, CF1/ CF2/ single interruption/ all interruption/ automatic data uploads
70		IOB5	I/O	Default: IOB5 Function 1: UART TXD 3 Function 2: ISO7816 CLK1 Function 3: SEG14
71	74	AVSS	G	Analog ground.
72	52	IOA14	I/O	Default: IOA14 Function 1: UART RXD 2 Function 2: EINT14 Function 3: SEG13
73	53	IOB4	I/O	Default: IOB4 Function 1: UART TXD 2 Function 2: SEG12
74	54	IOD15	I/O	Default: IOD15 Function 1: SEG11
75	55	IOD14	I/O	Default: IOD14 Function 1: SEG10
76	56	IOD13	I/O	Default: IOD13 Function 1: SEG9
77	57	IOD12	I/O	Default: IOD12 Function 1: SEG8
78		IOD11	I/O	Default: IOD11 Function 1: SEG7

79		VDDCAP	P	Main power supply decoupling pin, recommended external 0.1uF capacitor.
80		IOD10	I/O	Default: IOD10 Function 1: SEG6
81		IOD9	I/O	Default: IOD9 Function 1: SEG5
82		IOD8	I/O	Default: IOD8 Function 1: SEG4
83	58	IOD7	I/O	Default: IOD7 Function 1: COM7/SEG3
84	59	IOD6	I/O	Default: IOD6 Function 1: COM6/SEG2
85	60	IOD5	I/O	Default: IOD5 Function 1: COM5/SEG1
86	61	IOD4	I/O	Default: IOD4 Function 1: COM4/SEG0
87	62	IOD3	I/O	Default: IOD3 Function 1: COM3
88		AVSS	G	Analog ground.
89	63	IOD2	I/O	Default: IOD2 Function 1: COM2
90	64	IOD1	I/O	Default: IOD1 Function 1: COM1
91	65	IOD0	I/O	Default: IOD0 Function 1: COM0
92		IOE3	I/O	Default: IOE3 Function 1: SEG77
93		IOE2	I/O	Default: IOE2 Function 1: SEG76
94		IOE1	I/O	Default: IOE1 Function 1: SEG75
95	67	UP	I	Positive input pin for Voltage Channel Sampling.
96	68	UN	I	Negative input pin for Voltage Channel Sampling.
97	69	IBN	I	Negative input pin for current channel B sampling.
98	70	IBP	I	Positive input pin for current channel B sampling.
99	71	IAN	I	Negative input pin for current channel A sampling.
100	72	IAP	I	Positive input pin for current channel A sampling.
101		IOE0	I/O	Default: IOE0 Function 1: SEG74

102		IOA13	I/O	Default: IOA13 Function 1: UART RXD 1 Function 2: ISO7816 I/O 0 Function 3: EINT13 Function 4: SEG73
103		IOB3	I/O	Default: IOB3 Function 1: UART TXD 1 Function 2: ISO7816 CLK 0 Function 3: SEG72
104		IOA12	I/O	Default: IOA12 Function 1: UART RXD 0 Function 2: EINT12 Function 3: SEG71
105	75	IOB2	I/O	Default: IOB2 Function 1: UART TXD 0 Function 2: PLLL output Function 3: SEG70
106	76	IOA7	I/O	Default: IOA7 Function 1: Second pulse output (RTC_PLLDIV output) Function 2: EINT7 Function 3: SEG69
107	77	IOA6	I/O	Default: IOA6 Function 1: Comparator 2 output Function 2: EINT6 Function 3: SEG68
108	78	IOA5	I/O	Default: IOA5 Function 1: Comparator 2 N input Function 2: EINT5 Function 3: SEG67
109	79	IOA4	I/O	Default: IOA4 Function 1: Comparator 2 P input Function 2: EINT4 Function 3: SEG66
110	73	VDD_AFE	P	AFE supply voltage

3.Functional Block Diagram

3.1. Functional Block Diagram

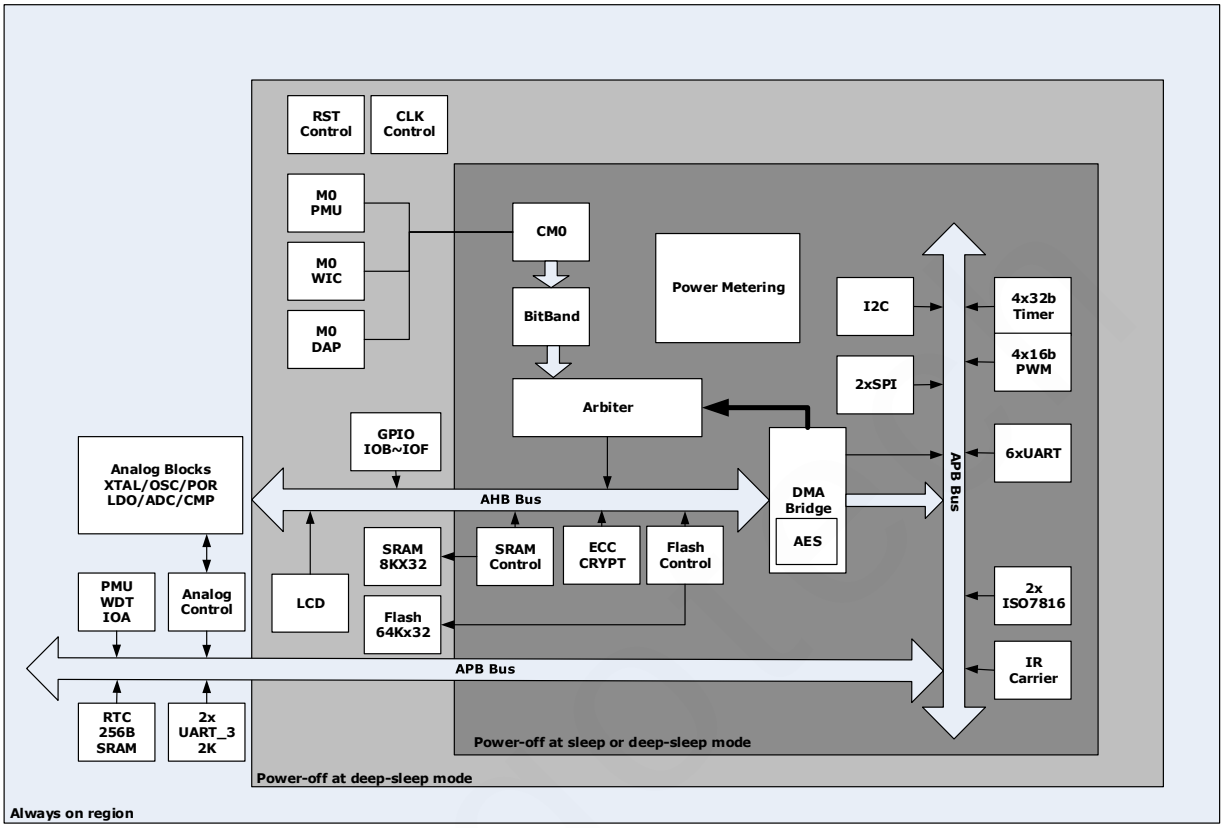

Figure 3-1 V94XX Functional Block Diagram

3.2. Power System Block Diagram

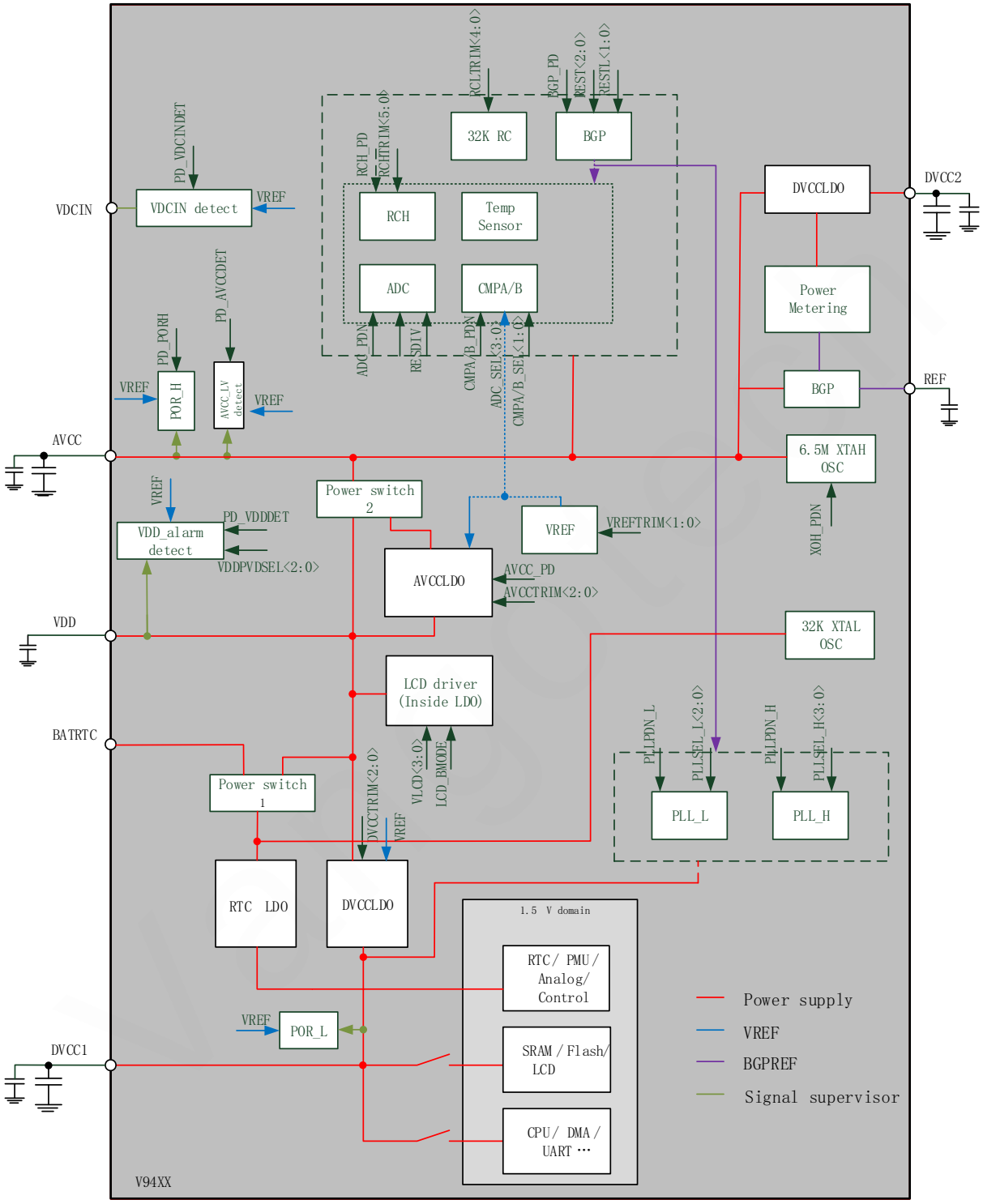

Figure 3-2 V94XX Power System Block Diagram

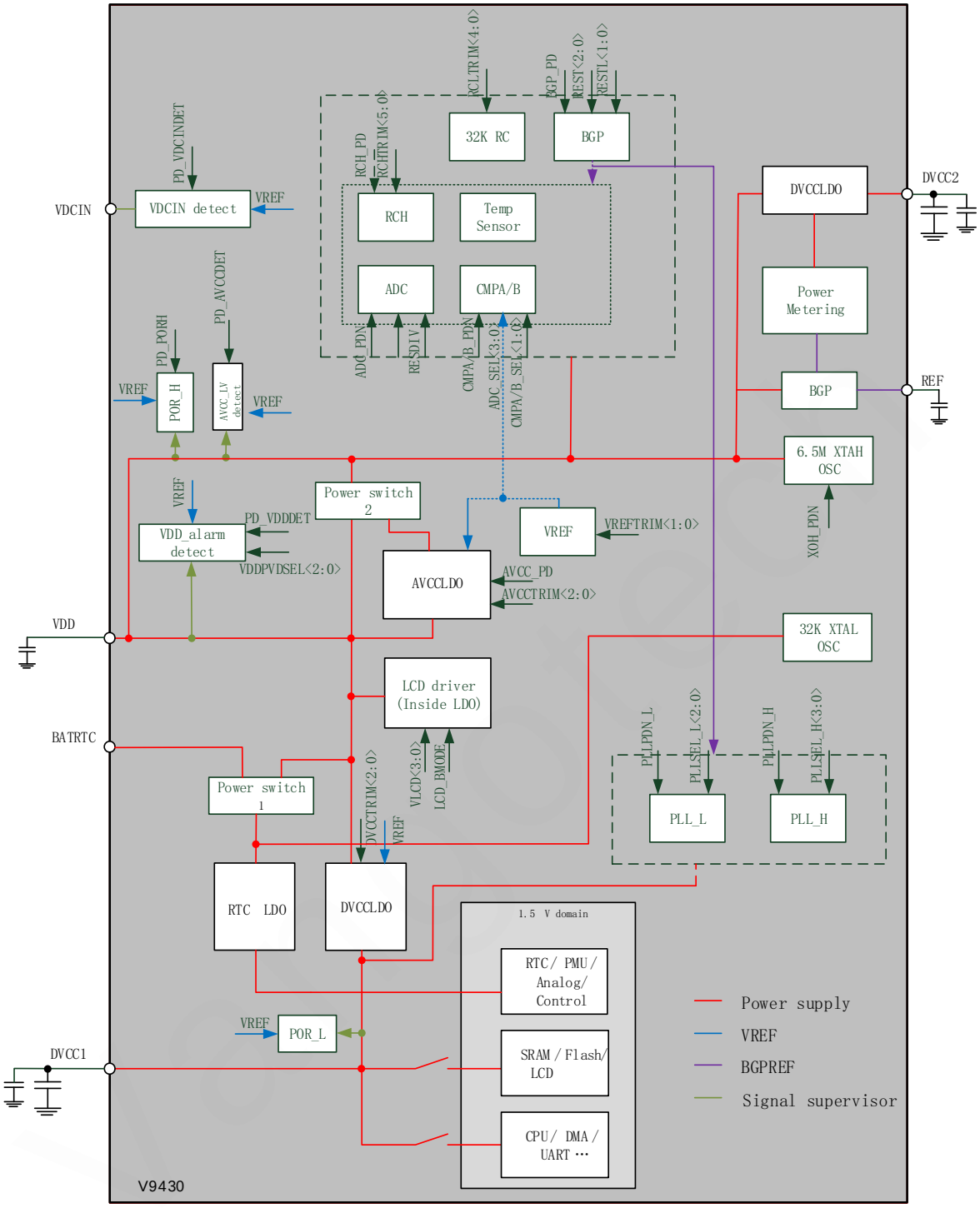

Figure 3-3 V9430 Power System Block Diagram

3.3. Clock Block Diagram

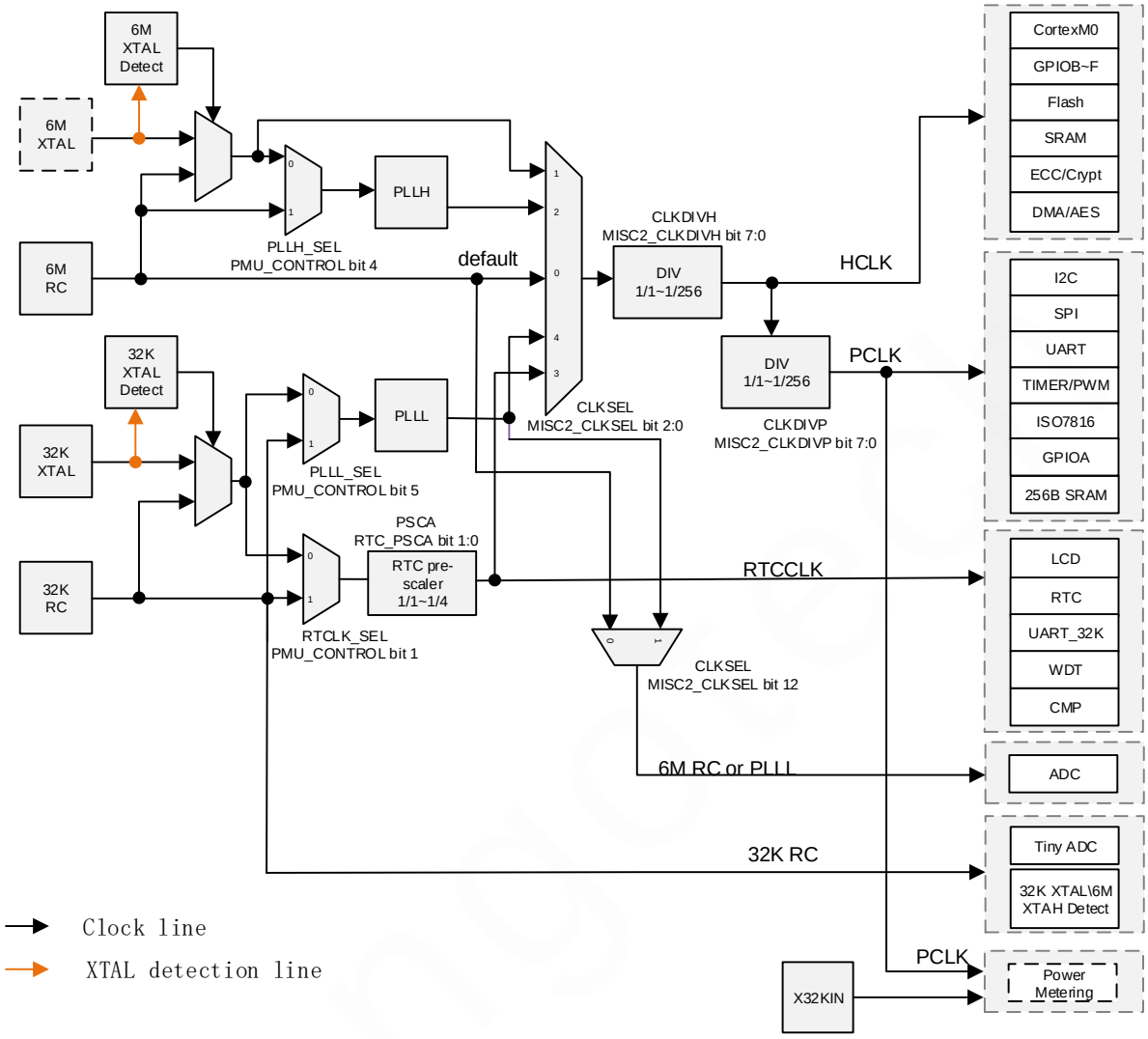

Figure 3-4 V94XX Clock Block Diagram

4.Memory Maps

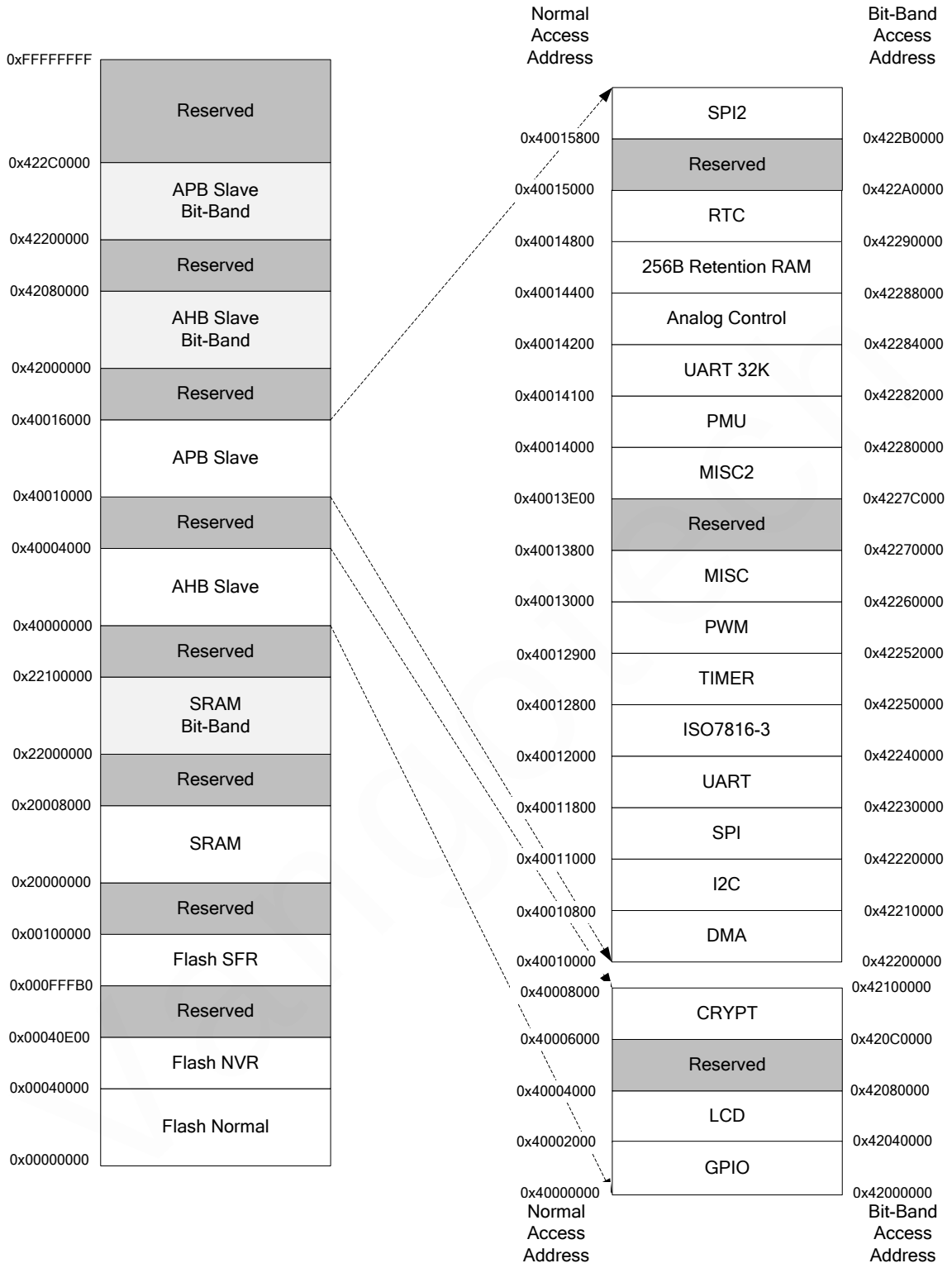

Figure 4-1 V94XX Memory Maps

The bit-band region can only be accessed by Cortex-M0. The DMA controller can't access these regions. For all other regions, they can be accessed by both Cortex-M0 and DMA controller.

4.1. Register Location

4.1.1. PMU Register Location

Table 4-1 Register Location of the PMU Controller (PMU Base: 0x40014000)

Name	Type	Address	Description	Default
PMU_DSLEEPEN	R/W	0x0000	PMU deep sleep enable register	0x00000000
PMU_DSLEEPPASS	R/W	0x0004	PMU deep sleep password register	0x00000000
PMU_CONTROL	R/W	0x0008	PMU control register	0x0000
PMU_STS	R/C	0x000C	PMU Status register	0x0000074
PMU_IOAOEN	R/W	0x0010	IOA output enable register	0xFFFF
PMU_IOAIE	R/W	0x0014	IOA input enable register	0xFFFF
PMU_IOADAT	R/W	0x0018	IOA data register	0x0000
PMU_IOAATT	R/W	0x001C	IOA attribute register	0x0000
PMU_IOAWKUEN	R/W	0x0020	IOA wake-up enable register	0x00000000
PMU_IOASTS	R	0x0024	IOA input status register	--
PMU_IOAINTSTS	R/C	0x0028	IOA interrupt status register	0x0000
PMU_IOASEL	R/W	0x0038	IOA special function select register	0x0000
VERSIONID	R	0x003C	Version ID of V94XX	--
PMU_WDTPASS	R/W	0x0040	Watch dog timing unlock register	0x00000000
PMU_WDTEN	R/W	0x0044	Watch dog timer enable register	0x1
PMU_WDTCLR	W	0x0048	Watch dog timer clear register	0x0000
PMU_IOANODEG	R/W	0x0050	IOA no-deglitch control register.	0x0000

Table 4-2 Register Location of the PMU Controller (PMU Retention RAM Base: 0x40014400)

Name	Type	Address	Description	Default
PMU_RAM0	R/W	0x0000	PMU 32 bits Retention RAM 0	--
PMU_RAM1	R/W	0x0004	PMU 32 bits Retention RAM 1	--
PMU_RAM2	R/W	0x0008	PMU 32 bits Retention RAM 2	--
			.....	
PMU_RAM63	R/W	0x00FC	PMU 32 bits Retention RAM 63	--

4.1.2. ANA Register Location

Table 4-3 Register Location of ANA Controller (ANA Base: 0x40014200)

Name	Type	Address	Description	Default
ANA_REG0	R/W	0x0000	Analog register 0	0x00
ANA_REG1	R/W	0x0004	Analog register 1	0x00
ANA_REG2	R/W	0x0008	Analog register 2	0x00
ANA_REG3	R/W	0x000C	Analog register 3	0x00
ANA_REG4	R/W	0x0010	Analog register 4	0x00
ANA_REG5	R/W	0x0014	Analog register 5	0x00
ANA_REG6	R/W	0x0018	Analog register 6	0x00
ANA_REG7	R/W	0x001C	Analog register 7	0x00
ANA_REG8	R/W	0x0020	Analog register 8	0x00
ANA_REG9	R/W	0x0024	Analog register 9	0x00
ANA_REGA	R/W	0x0028	Analog register 10	0x00
ANA_REGB	R/W	0x002C	Analog register 11	From FLASH
ANA_REGC	R/W	0x0030	Analog register 12	From FLASH
ANA_REGD	R/W	0x0034	Analog register 13	From FLASH
ANA_REGE	R/W	0x0038	Analog register 14	From FLASH
ANA_REGF	R/W	0x003C	Analog register 15	0x00
ANA_CTRL	R/W	0x0050	Analog control register	0x0000000
ANA_CMPOUT	R	0x0054	Comparator result register	0x0030
ANA_INTSTS	R/C	0x0060	Analog interrupt status register	0x0000
ANA_INTEN	R/W	0x0064	Analog interrupt enable register	0x0000
ANA_ADCCTRL	R/W	0x0068	ADC control register	0x00000000
ANA_ADCDATA0	R	0x0070	ADC channel 0 data register	--
ANA_ADCDATA1	R	0x0074	ADC channel 1 data register	--
ANA_ADCDATA2	R	0x0078	ADC channel 2 data register	--
ANA_ADCDATA3	R	0x007C	ADC channel 3 data register	--
ANA_ADCDATA4	R	0x0080	ADC channel 4 data register	--
ANA_ADCDATA5	R	0x0084	ADC channel 5 data register	--
ANA_ADCDATA6	R	0x0088	ADC channel 6 data register	--

ANA_ADCDATA7	R	0x008C	ADC channel 7 data register	--
ANA_ADCDATA8	R	0x0090	ADC channel 8 data register	--
ANA_ADCDATA9	R	0x0094	ADC channel 9 data register	--
ANA_ADCDATAA	R	0x0098	ADC channel 10 data register	--
ANA_ADCDATAB	R	0x009C	ADC channel 11 data register	--
ANA_CMPCNT1	R/C	0x00B0	Comparator 1 counter	0x00000000
ANA_CMPCNT2	R/C	0x00B4	Comparator 2 counter	0x00000000
ANA_MISC	R/W	0x00B8	Analog misc. control register	0x00

4.1.3. RTC Register Location

Table 4-4 Register Location of RTC Controller (RTC Base: 0x40014800)

Name	Type	Address	Description	Default	Write Protect	Read Protect
RTC_SEC	R/W	0x0000	RTC second register	--	V	V
RTC_MIN	R/W	0x0004	RTC minute register	--	V	V
RTC_HOUR	R/W	0x0008	RTC hour register	--	V	V
RTC_DAY	R/W	0x000C	RTC day register	--	V	V
RTC_WEEK	R/W	0x0010	RTC week-day register	--	V	V
RTC_MON	R/W	0x0014	RTC month register	--	V	V
RTC_YEAR	R/W	0x0018	RTC year register	--	V	V
RTC_WKUSEC	R/W	0x0020	RTC wake-up second register	0x00	V	
RTC_WKUMIN	R/W	0x0024	RTC wake-up minute register	0x00	V	
RTC_WKUHOUR	R/W	0x0028	RTC wake-up hour register	0x00	V	
RTC_WKUCNT	R/W	0x002C	RTC wake-up counter register	0x0000000	V	
RTC_CAL	R/W	0x0030	RTC calibration register	--	V	
RTC_DIV	R/W	0x0034	RTC PLL divider register	0x0000000		
RTC_CTL	R/W	0x0038	RTC PLL divider control register	0x0		
RTC_PWD	R/W	0x0044	RTC password control register	0x00000000		
RTC_CE	R/W	0x0048	RTC write enable control register	0x0		
RTC_LOAD	R/W	0x004C	RTC read enable control register	--		
RTC_INTSTS	R/W	0x0050	RTC interrupt status control	0x000		

			register			
RTC_INTEN	R/W	0x0054	RTC interrupt enable control register	0x000		
RTC_PSCA	R/W	0x0058	RTC clock pre-scaler control register	0x0	V	
RTC_ACTI	R/W	0x0084	RTC center temperature control register	0x1800	V	
RTC_ACF200	R/W	0x0088	RTC 200*frequency control register	0x640000	V	
RTC_ACP0	R/W	0x0090	RTC parameter 0 control register	0x0000	V	
RTC_ACP1	R/W	0x0094	RTC parameter 1 control register	0x0000	V	
RTC_ACP2	R/W	0x0098	RTC parameter 2 control register	0x0000	V	
RTC_ACP3	R	0x009C	RTC parameter 3 control register	0x0000		
RTC_ACP4	R/W	0x00A0	RTC parameter 4 control register	0x0000	V	
RTC_ACP5	R/W	0x00A4	RTC parameter 5 control register	0x0000	V	
RTC_ACP6	R/W	0x00A8	RTC parameter 6 control register	0x0000	V	
RTC_ACP7	R/W	0x00AC	RTC parameter 7 control register	0x0000	V	
RTC_ACK1	R/W	0x00B0	RTC parameter k1 control register	0x0000	V	
RTC_ACK2	R/W	0x00B4	RTC parameter k2 control register	0x0000	V	
RTC_ACK3	R/W	0x00B8	RTC parameter k3 control register	0x0000	V	
RTC_ACK4	R/W	0x00BC	RTC parameter k4 control register	0x0000	V	
RTC_ACK5	R/W	0x00C0	RTC parameter k5 control register	0x0000	V	
RTC_WKUCNTR	R	0x00CC	This register is used to represent the current WKUCNT value	0x000000	V	
RTC_ACKTEMP	R/W	0x00D0	RTC k temperature section control register	0x3C2800EC	V	

4.1.4. FLASH Register Location

Table 4-5 Register Location of FLASH Controller (FLASH Controller Base: 0x00000000)

Name	Type	Address	Description	Default

FLASH_STS	R	0xFFFBC	FLASH programming status register	0x00
FLASH_INT	R/C	0xFFFCC	FLASH Checksum interrupt status	0x0
FLASH_CSSADDR	R/W	0xFFFD0	FLASH Checksum start address	0x00000
FLASH_CSEADDR	R/W	0xFFFD4	FLASH Checksum end address	0xFFFFF
FLASH_CSVALUE	R	0xFFFD8	FLASH Checksum value register	--
FLASH_CSCVALUE	R/W	0xFFFDC	FLASH Checksum compare value register	0x00000000
FLASH_PASS	R/W	0xFFFE0	FLASH password register	0x00000000
FLASH_CTRL	R/W	0xFFFE4	FLASH control register	0x0
FLASH_PGADDR	R/W	0xFFFE8	FLASH program address register	0x00000
FLASH_PGDATA	R/W	0xFFFEC	FLASH program word data register	--
FLASH_PGB0	R/W	0xFFFEC	FLASH program byte data register 0	--
FLASH_PGB1	R/W	0xFFFED	FLASH program byte data register 1	--
FLASH_PGB2	R/W	0xFFFEE	FLASH program byte data register 2	--
FLASH_PGB3	R/W	0xFFFEF	FLASH program byte data register 3	--
FLASH_PGHW0	R/W	0xFFFEC	FLASH program half-word data register 0	--
FLASH_PGHW1	R/W	0xFFFEE	FLASH program half-word data register 1	--
FLASH_SERASE	R/W	0xFFFF4	FLASH sector erase control register	0x00000000
FLASH_CERASE	R/W	0xFFFF8	FLASH chip erase control register	0x00000000
FLASH_DSTB	R/W	0xFFFFC	FLASH deep standby control register	0x00000000

4.1.5. GPIO Register Location

Table 4-6 Register Location of GPIO Controller (GPIO Base: 0x40000000)

Name	Type	Address	Description	Default
IOB_OEN	R/W	0x0020	IOB output enable register	0xFFFF
IOB_IE	R/W	0x0024	IOB input enable register	0xFFFF
IOB_DAT	R/W	0x0028	IOB data register	0x0000
IOB_ATT	R/W	0x002C	IOB attribute register	0x0000
IOB_STS	R	0x0030	IOB input status register	--
IOC_OEN	R/W	0x0040	IOC output enable register	0xFFFF
IOC_IE	R/W	0x0044	IOC input enable register	0xFFFF
IOC_DAT	R/W	0x0048	IOC data register	0x0000

IOC_ATT	R/W	0x004C	IOC attribute register	0x0000
IOC_STS	R	0x0050	IOC input status register	--
IOD_OEN	R/W	0x0060	IOD output enable register	0xFFFF
IOD_IE	R/W	0x0064	IOD input enable register	0xFFFF
IOD_DAT	R/W	0x0068	IOD data register	0x0000
IOD_ATT	R/W	0x006C	IOD attribute register	0x0000
IOD_STS	R	0x0070	IOD input status register	--
IOE_OEN	R/W	0x0080	IOE output enable register	0xFFFF
IOE_IE	R/W	0x0084	IOE input enable register	0xFFFF
IOE_DAT	R/W	0x0088	IOE data register	0x0000
IOE_ATT	R/W	0x008C	IOE attribute register	0x0000
IOE_STS	R	0x0090	IOE input status register	--
IOF_OEN	R/W	0x00A0	IOF output enable register	0x3
IOF_IE	R/W	0x00A4	IOF input enable register	0x3
IOF_DAT	R/W	0x00A8	IOF data register	0x0
IOF_ATT	R/W	0x00AC	IOF attribute register	0x0
IOF_STS	R	0x00B0	IOF input status register	--
IOB_SEL	R/W	0x00C0	IOB special function select register	0x00
IOE_SEL	R/W	0x00CC	IOE special function select register	0x00
IO_MISC	R/W	0x00E0	IO misc. control register	0x00

4.1.6. DMA Register Location

Table 4-7 Register Location of DMA Controller (DMA Base: 0x40010000)

Name	Type	Address	Description	Default
DMA_IE	R/W	0x0000	DMA interrupt enable register	0x000
DMA_STS	R/W	0x0004	DMA status register	0x0000
DMA_C0CTL	R/W	0x0010	DMA channel 0 control register	0x00000000
DMA_C0SRC	R/W	0x0014	DMA channel 0 source register	0x00000000
DMA_C0DST	R/W	0x0018	DMA channel 0 destination register	0x00000000
DMA_C0LEN	R	0x001C	DMA channel 0 transfer length register	0x0000
DMA_C1CTL	R/W	0x0020	DMA channel 1 control register	0x00000000

DMA_C1SRC	R/W	0x0024	DMA channel 1 source register	0x00000000
DMA_C1DST	R/W	0x0028	DMA channel 1 destination register	0x00000000
DMA_C1LEN	R	0x002C	DMA channel 1 transfer length register	0x0000
DMA_C2CTL	R/W	0x0030	DMA channel 2 control register	0x00000000
DMA_C2SRC	R/W	0x0034	DMA channel 2 source register	0x00000000
DMA_C2DST	R/W	0x0038	DMA channel 2 destination register	0x00000000
DMA_C2LEN	R	0x003C	DMA channel 2 transfer length register	0x0000
DMA_C3CTL	R/W	0x0040	DMA channel 3 control register	0x00000000
DMA_C3SRC	R/W	0x0044	DMA channel 3 source register	0x00000000
DMA_C3DST	R/W	0x0048	DMA channel 3 destination register	0x00000000
DMA_C3LEN	R	0x004C	DMA channel 3 transfer length register	0x0000
DMA_AESCTL	R/W	0x0050	DMA AES control register	0x00000000
DMA_AESKEY0	R/W	0x0060	DMA AES key 0 register	0x00000000
DMA_AESKEY1	R/W	0x0064	DMA AES key 1 register	0x00000000
DMA_AESKEY2	R/W	0x0068	DMA AES key 2 register	0x00000000
DMA_AESKEY3	R/W	0x006C	DMA AES key 3 register	0x00000000
DMA_AESKEY4	R/W	0x0070	DMA AES key 4 register	0x00000000
DMA_AESKEY5	R/W	0x0074	DMA AES key 5 register	0x00000000
DMA_AESKEY6	R/W	0x0078	DMA AES key 6 register	0x00000000
DMA_AESKEY7	R/W	0x007C	DMA AES key 7 register	0x00000000

4.1.7. UART Register Location

Table 4-8 Register Location of UART Controller (UART Base: 0x40011800)

Name	Type	Address	Description	Default
UART0_DATA	R/W	0x0000	UART0 data register	0x00
UART0_STATE	R/C	0x0004	UART0 status register	0x00
UART0_CTRL	R/W	0x0008	UART0 control register	0x000
UART0_INTSTS	R/C	0x000C	UART0 interrupt status register	0x00
UART0_BAUDDIV	R/W	0x0010	UART0 baud rate divide register	0x00000
UART0_CTRL2	R/W	0x0014	UART0 control register 2	0x0
UART1_DATA	R/W	0x0020	UART1 data register	0x00

UART1_STATE	R/C	0x0024	UART1 status register	0x00
UART1_CTRL	R/W	0x0028	UART1 control register	0x000
UART1_INTSTS	R/C	0x002C	UART1 interrupt status register	0x00
UART1_BAUDDIV	R/W	0x0030	UART1 baud rate divide register	0x00000
UART1_CTRL2	R/W	0x0034	UART1 control register 2	0x0
UART2_DATA	R/W	0x0040	UART2 data register	0x00
UART2_STATE	R/C	0x0044	UART2 status register	0x00
UART2_CTRL	R/W	0x0048	UART2 control register	0x000
UART2_INTSTS	R/C	0x004C	UART2 interrupt status register	0x00
UART2_BAUDDIV	R/W	0x0050	UART2 baud rate divide register	0x00000
UART2_CTRL2	R/W	0x0054	UART2 control register 2	0x0
UART3_DATA	R/W	0x0060	UART3 data register	0x00
UART3_STATE	R/C	0x0064	UART3 status register	0x00
UART3_CTRL	R/W	0x0068	UART3 control register	0x000
UART3_INTSTS	R/C	0x006C	UART3 interrupt status register	0x00
UART3_BAUDDIV	R/W	0x0070	UART3 baud rate divide register	0x00000
UART3_CTRL2	R/W	0x0074	UART3 control register 2	0x0
UART4_DATA	R/W	0x0080	UART4 data register	0x00
UART4_STATE	R/C	0x0084	UART4 status register	0x00
UART4_CTRL	R/W	0x0088	UART4 control register	0x000
UART4_INTSTS	R/C	0x008C	UART4 interrupt status register	0x00
UART4_BAUDDIV	R/W	0x0090	UART4 baud rate divide register	0x00000
UART4_CTRL2	R/W	0x0094	UART4 control register 2	0x0
UART5_DATA	R/W	0x00A0	UART5 data register	0x00
UART5_STATE	R/C	0x00A4	UART5 status register	0x00
UART5_CTRL	R/W	0x00A8	UART5 control register	0x000
UART5_INTSTS	R/C	0x00AC	UART5 interrupt status register	0x00
UART5_BAUDDIV	R/W	0x00B0	UART5 baud rate divide register	0x00000
UART5_CTRL2	R/W	0x00B4	UART5 control register 2	0x0

4.1.8. UART 32K Register Location

Table 4-9 Register Location of UART 32K Controller (UART 32K 0 Base: 0x40014100)

Name	Type	Address	Description	Default
U32K0_CTRL0	R/W	0x0000	UART 32K 0 control register 0	0x00
U32K0_CTRL1	R/W	0x0004	UART 32K 0 control register 1	0x00
U32K0_PHASE	R/W	0x0008	UART 32K 0 baud rate control register	0x4B00
U32K0_DATA	R	0x000C	UART 32K 0 receive data buffer	--
U32K0_STS	R/C	0x0010	UART 32K 0 interrupt status register	0x00
U32K1_CTRL0	R/W	0x0080	UART 32K 1 control register 0	0x00
U32K1_CTRL1	R/W	0x0084	UART 32K 1 control register 1	0x00
U32K1_PHASE	R/W	0x0088	UART 32K 1 baud rate control register	0x4B00
U32K1_DATA	R	0x008C	UART 32K 1 receive data buffer	--
U32K1_STS	R/C	0x0090	UART 32K 1 interrupt status register	0x00

4.1.9. ISO7816 Register Location

Table 4-10 Register Location of ISO7816 Controller (ISO7816 Base: 0x40012000)

Name	Type	Address	Description	Default
ISO78160_BAUDDIVL	R/W	0x0004	ISO78160 baud-rate low byte register	0x00
ISO78160_BAUDDIVH	R/W	0x0008	ISO78160 baud-rate high byte register	0x00
ISO78160_DATA	R/W	0x000C	ISO78160 data register	0x00
ISO78160_INFO	R/C	0x0010	ISO78160 information register	0x00
ISO78160_CFG	R/W	0x0014	ISO78160 control register	0x00
ISO78160_CLK	R/W	0x0018	ISO78160 clock divider control register	0x00
ISO78161_BAUDDIVL	R/W	0x0044	ISO78161 baud-rate low byte register	0x00
ISO78161_BAUDDIVH	R/W	0x0048	ISO78161 baud-rate high byte register	0x00
ISO78161_DATA	R/W	0x004C	ISO78161 data register	0x00
ISO78161_INFO	R/C	0x0050	ISO78161 information register	0x00
ISO78161_CFG	R/W	0x0054	ISO78161 control register	0x00
ISO78161_CLK	R/W	0x0058	ISO78161 clock divider control register	0x00

4.1.10. TIMER/PWM Register Location

Table 4-11 Register Location of 32b TIMER Controller (32b TIMER Base: 0x40012800)

Name	Type	Address	Description	Default
TMR0_CTRL	R/W	0x0000	Timer 0's control register	0x0
TMR0_VALUE	R/W	0x0004	Timer 0's current count register	0x00000000
TMR0_RELOAD	R/W	0x0008	Timer 0's reload register	0x00000000
TMR0_INT	R/C	0x000C	Timer 0's interrupt status register	0x0
TMR1_CTRL	R/W	0x0020	Timer 1's control register	0x0
TMR1_VALUE	R/W	0x0024	Timer 1's current count register	0x00000000
TMR1_RELOAD	R/W	0x0028	Timer 1's reload register	0x00000000
TMR1_INT	R/C	0x002C	Timer 1's interrupt status register	0x0
TMR2_CTRL	R/W	0x0040	Timer 2's control register	0x0
TMR2_VALUE	R/W	0x0044	Timer 2's current count register	0x00000000
TMR2_RELOAD	R/W	0x0048	Timer 2's reload register	0x00000000
TMR2_INT	R/C	0x004C	Timer 2's interrupt status register	0x0
TMR3_CTRL	R/W	0x0060	Timer 3's control register	0x0
TMR3_VALUE	R/W	0x0064	Timer 3's current count register	0x00000000
TMR3_RELOAD	R/W	0x0068	Timer 3's reload register	0x00000000
TMR3_INT	R/C	0x006C	Timer 3's interrupt status register	0x0

Table 4-12 Register Location of 16b PWM TIMER Controller (16-bit PWM TIMER Base: 0x40012900)

Name	Type	Address	Description	Default
PWM0_CTL	R/W	0x0000	PWM Timer 0's control register	0x00
PWM0_TAR	R	0x0004	PWM Timer 0's current count register	0x0000
PWM0_CCTL0	R/W	0x0008	PWM Timer 0's compare control register 0	0x000
PWM0_CCTL1	R/W	0x000C	PWM Timer 0's compare control register 1	0x000
PWM0_CCTL2	R/W	0x0010	PWM Timer 0's compare control register 2	0x000
PWM0_CCR0	R/W	0x0014	PWM Timer 0's compare data register 0	0x0000
PWM0_CCR1	R/W	0x0018	PWM Timer 0's compare data register 1	0x0000
PWM0_CCR2	R/W	0x001C	PWM Timer 0's compare data register 2	0x0000
PWM1_CTL	R/W	0x0020	PWM Timer 1's control register	0x00

PWM1_TAR	R	0x0024	PWM Timer 1's current count register	0x0000
PWM1_CCTL0	R/W	0x0028	PWM Timer 1's compare control register 0.	0x000
PWM1_CCTL1	R/W	0x002C	PWM Timer 1's compare control register 1	0x000
PWM1_CCTL2	R/W	0x0030	PWM Timer 1's compare control register 2	0x000
PWM1_CCR0	R/W	0x0034	PWM Timer 1's compare data register 0	0x0000
PWM1_CCR1	R/W	0x0038	PWM Timer 1's compare data register 1	0x0000
PWM1_CCR2	R/W	0x003C	PWM Timer 1's compare data register 2	0x0000
PWM2_CTL	R/W	0x0040	PWM Timer 2's control register	0x00
PWM2_TAR	R	0x0044	PWM Timer 2's current count register	0x0000
PWM2_CCTL0	R/W	0x0048	PWM Timer 2's compare control register 0	0x000
PWM2_CCTL1	R/W	0x004C	PWM Timer 2's compare control register 1	0x000
PWM2_CCTL2	R/W	0x0050	PWM Timer 2's compare control register 2	0x000
PWM2_CCR0	R/W	0x0054	PWM Timer 2's compare data register 0	0x0000
PWM2_CCR1	R/W	0x0058	PWM Timer 2's compare data register 1	0x0000
PWM2_CCR2	R/W	0x005C	PWM Timer 2's compare data register 2	0x0000
PWM3_CTL	R/W	0x0060	PWM Timer 3's control register	0x00
PWM3_TAR	R	0x0064	PWM Timer 3's current count register	0x0000
PWM3_CCTL0	R/W	0x0068	PWM Timer 3's compare control register 0	0x000
PWM3_CCTL1	R/W	0x006C	PWM Timer 3's compare control register 1	0x000
PWM3_CCTL2	R/W	0x0070	PWM Timer 3's compare control register 2	0x000
PWM3_CCR0	R/W	0x0074	PWM Timer 3's compare data register 0	0x0000
PWM3_CCR1	R/W	0x0078	PWM Timer 3's compare data register 1	0x0000
PWM3_CCR2	R/W	0x007C	PWM Timer 3's compare data register 2	0x0000
PWM_O_SEL	R/W	0x00F0	PWM output selection register	0xDB51

4.1.11. LCD Register Location

Table 4-13 Register Location of LCD Controller (LCD Base: 0x40002000)

Name	Type	Address	Description	Default
LCD_FB00	R/W	0x0000	LCD Frame buffer 0 register	--
LCD_FB01	R/W	0x0004	LCD Frame buffer 1 register	--
LCD_FB02	R/W	0x0008	LCD Frame buffer 2 register	--

LCD_FB03	R/W	0x000C	LCD Frame buffer 3 register	--
LCD_FB04	R/W	0x0010	LCD Frame buffer 4 register	--
LCD_FB05	R/W	0x0014	LCD Frame buffer 5 register	--
LCD_FB06	R/W	0x0018	LCD Frame buffer 6 register	--
LCD_FB07	R/W	0x001C	LCD Frame buffer 7 register	--
LCD_FB08	R/W	0x0020	LCD Frame buffer 8 register	--
LCD_FB09	R/W	0x0024	LCD Frame buffer 9 register	--
LCD_FB0A	R/W	0x0028	LCD Frame buffer 10 register	--
LCD_FB0B	R/W	0x002C	LCD Frame buffer 11 register	--
LCD_FB0C	R/W	0x0030	LCD Frame buffer 12 register	--
LCD_FB0D	R/W	0x0034	LCD Frame buffer 13 register	--
LCD_FB0E	R/W	0x0038	LCD Frame buffer 14 register	--
LCD_FB0F	R/W	0x003C	LCD Frame buffer 15 register	--
LCD_FB10	R/W	0x0040	LCD Frame buffer 16 register	--
LCD_FB11	R/W	0x0044	LCD Frame buffer 17 register	--
LCD_FB12	R/W	0x0048	LCD Frame buffer 18 register	--
LCD_FB13	R/W	0x004C	LCD Frame buffer 19 register	--
LCD_FB14	R/W	0x0050	LCD Frame buffer 20 register	--
LCD_FB15	R/W	0x0054	LCD Frame buffer 21 register	--
LCD_FB16	R/W	0x0058	LCD Frame buffer 22 register	--
LCD_FB17	R/W	0x005C	LCD Frame buffer 23 register	--
LCD_FB18	R/W	0x0060	LCD Frame buffer 24 register	--
LCD_FB19	R/W	0x0064	LCD Frame buffer 25 register	--
LCD_FB1A	R/W	0x0068	LCD Frame buffer 26 register	--
LCD_FB1B	R/W	0x006C	LCD Frame buffer 27 register	--
LCD_FB1C	R/W	0x0070	LCD Frame buffer 28 register	--
LCD_FB1D	R/W	0x0074	LCD Frame buffer 29 register	--
LCD_FB1E	R/W	0x0078	LCD Frame buffer 30 register	--
LCD_FB1F	R/W	0x007C	LCD Frame buffer 31 register	--
LCD_FB20	R/W	0x0080	LCD Frame buffer 32 register	--
LCD_FB21	R/W	0x0084	LCD Frame buffer 33 register	--

LCD_FB22	R/W	0x0088	LCD Frame buffer 34 register	--
LCD_FB23	R/W	0x008C	LCD Frame buffer 35 register	--
LCD_FB24	R/W	0x0090	LCD Frame buffer 36 register	--
LCD_FB25	R/W	0x0094	LCD Frame buffer 37 register	--
LCD_FB26	R/W	0x0098	LCD Frame buffer 38 register	--
LCD_FB27	R/W	0x009C	LCD Frame buffer 39 register	--
LCD_CTRL	R/W	0x0100	LCD control register	0x00
LCD_CTRL2	R/W	0x0104	LCD control register 2	0x0000
LCD_SEGCTRL0	R/W	0x0108	LCD segment enable control register 0	0x00000000
LCD_SEGCTRL1	R/W	0x010C	LCD segment enable control register 1	0x00000000
LCD_SEGCTRL2	R/W	0x0110	LCD segment enable control register 2	0x00000000

4.1.12. SPI Register Location

Table 4-14 Register Location of SPI1 Controller (SPI1 Base: 0x40011000)

Name	Type	Address	Description	Default
SPI1_CTRL	R/W	0x0000	SPI1 Control Register	0x0000
SPI1_TXSTS	R/W	0x0004	SPI1 Transmit Status Register	0x8200
SPI1_TXDAT	R/W	0x0008	SPI1 Transmit FIFO register	--
SPI1_RXSTS	R/W	0x000C	SPI1 Receive Status Register	0x0000
SPI1_RXDAT	R	0x0010	SPI1 Receive FIFO Register	--
SPI1_MISC	R/W	0x0014	SPI1 Misc. Control Register	0x0003

Table 4-15 Register Location ofSPI2 Controller (SPI2 Base: 0x40015800)

Name	Type	Address	Description	Default
SPI2_CTRL	R/W	0x0000	SPI2 Control Register	0x0000
SPI2_TXSTS	R/W	0x0004	SPI2 Transmit Status Register	0x8200
SPI2_TXDAT	R/W	0x0008	SPI2 Transmit FIFO register	--
SPI2_RXSTS	R/W	0x000C	SPI2 Receive Status Register	0x0000
SPI2_RXDAT	R	0x0010	SPI2 Receive FIFO Register	--
SPI2_MISC	R/W	0x0014	SPI2 Misc. Control Register	0x0003

4.1.13. I2C Register Location

Table 4-16 Register Location of I2C Controller (I2C Base: 0x40010800)

Name	Type	Address	Description	Default
I2C_DATA	R/W	0x0000	I2C data register	0x00
I2C_ADDR	R/W	0x0004	I2C address register	0x00
I2C_CTRL	R/W	0x0008	I2C control/status register	0x00
I2C_STS	R/W	0x000c	I2C status register	0xF8
I2C_CTRL2	R/W	0x0018	I2C interrupt enable register	0x0

4.1.14. MISC Register Location

Table 4-17 Register Location of MISC Controller (MISC Base: 0x40013000)

Name	Type	Address	Description	Default
MISC_SRAMINT	R/C	0x0000	SRAM parity error Interrupt	0x00
MISC_SRAMINIT	R/W	0x0004	SRAM initialize register	0x01
MISC_PARERR	R	0x0008	SRAM parity error address register	0x0000
MISC_IREN	R/W	0x000C	IR enable control register	0x00
MISC_DUTYL	R/W	0x0010	IR duty low pulse control register	0x0000
MISC_DUTYH	R/W	0x0014	IR Duty high pulse control register	0x0000
MISC_IRQLAT	R/W	0x0018	Cortex-M0 IRQ latency control register	0x00
MISC_HIADDR	R	0x0020	AHB invalid access address	--
MISC_PIADDR	R	0x0024	APB invalid access address	--

Table 4-18 Register Location of MISC2 Controller (MISC2 Base: 0x40013E00)

Name	Type	Address	Description	Default
MISC2_FLASHWC	R/W	0x0000	FLASH wait cycle register	0x2100
MISC2_CLKSEL	R/W	0x0004	Clock selection register	0x0
MISC2_CLKDIVH	R/W	0x0008	AHB clock divider control register	0x00
MISC2_CLKDIVP	R/W	0x000C	APB clock divider control register	0x01
MISC2_HCLKEN	R/W	0x0010	AHB clock enable control register	0x1FF
MISC2_PCLKEN	R/W	0x0014	APB clock enable control register	0xFFFFFFFF

4.1.15. CRYPT Register Location

Table 4-19 Register Location of CRYPT Controller (MISC Base: 0x40006000)

Name	Type	Address	Description	Default
CRYPT_CTRL	R/W	0x0000	CRYPT control register	0x0000
CRYPT_PTRA	R/W	0x0004	CRYPT pointer A	0x0000
CRYPT_PTRB	R/W	0x0008	CRYPT pointer B	0x0000
CRYPT_PTRO	R/W	0x000C	CRYPT pointer O	0x0000
CRYPT_CARRY	R	0x0010	CRYPT carry/borrow bit register	0x0

4.1.16. Info Information Register

The analog trim data and boot option is stored in Info Sector 6 (0x40C00); the RTC calibration data is stored in Info Sector 4 (0x40800). The address 0x40800 ~ 0x409FF data is written by special tool (offline download and RTC calibration). Other data is written before leaving factory. The following table shows the details of this information.

Info Sector data can only be read and cannot be written. All information has a backup. The first data in the form is expressed in 1, and second copies in 2. Each data has a checksum data. Checksum algorithm: add up each data, and reverse the result.

Table 4-20 Info Information Register

Address	Sign	Data	Description
0x00040800	P4	RTC normal temperature offset 1	Load low 16 bits to RTC_ACP4 register, such as 0. (Unit: 0.1ppm).
0x00040804		Check sum 1	INV (SUM (0x40800, 0x40800))
0x00040808	P4	RTC normal temperature offset 2	Load low 16 bits to RTC_ACP4 register, such as 0. (Unit: 0.1ppm).
0x0004080C		Check sum 2	INV (SUM (0x40808, 0x40808))
0x00040810	K1	Crystal secondary calibration coefficient K1 1	Load to RTC_ACK1 register. K1 is calculated as follows: K1=B1/1000000*65536, B1 is the segment factor of crystal oscillator' quadratic curve. For example, the value of K1 is 20827.
0x00040814	K2	Crystal secondary calibration coefficient K2 1	Load to RTC_ACK2 register. K2 is calculated as follows: K2=B2/1000000*65536, B2 is the segment factor of crystal oscillator' quadratic curve. For example, the value of K2 is 21496.

0x00040818	K3	Crystal secondary calibration coefficient K3 1	Load to RTC_ACK3 register. K3 is calculated as follows: K3=B3/1000000*65536, B3 is the segment factor of crystal oscillator' quadratic curve. For example, the value of K3 is 22020.
0x0004081C	K4	Crystal secondary calibration coefficient K4 1	Load to RTC_ACK4 register. K4 is calculated as follows: K4=B4/1000000*65536, B4 is the segment factor of crystal oscillator' quadratic curve. For example, the value of K4 is 24517.
0x00040820	K5	Crystal secondary calibration coefficient K5 1	Load to RTC_ACK5 register. K5 is calculated as follows: K5=B5/1000000*65536, B5 is the segment factor of crystal oscillator' quadratic curve. For example, the value of K5 is 25257.
0x00040824		Check sum 1	INV (SUM (0x40810, 0x40820))
0x00040828	K1	Crystal secondary calibration coefficient K1 2	Load to RTC_ACK1 register. K1 is calculated as follows: K1=B1/1000000*65536, B1 is the segment factor of crystal oscillator' quadratic curve. For example, the value of K1 is 20827.
0x0004082C	K2	Crystal secondary calibration coefficient K2 2	Load to RTC_ACK2 register. K2 is calculated as follows: K2=B2/1000000*65536, B2 is the segment factor of crystal oscillator' quadratic curve. For example, the value of K2 is 21496.
0x00040830	K3	Crystal secondary calibration coefficient K3 2	Load to RTC_ACK3 register. K3 is calculated as follows: K3=B3/1000000*65536, B3 is the segment factor of crystal oscillator' quadratic curve. For example, the value of K3 is 22020.
0x00040834	K4	Crystal secondary calibration coefficient K4 2	Load to RTC_ACK4 register. K4 is calculated as follows: K4=B4/1000000*65536, B4 is the segment factor of crystal oscillator' quadratic curve. For example, the value of K4 is 24517.
0x00040838	K5	Crystal secondary calibration coefficient K5 2	Load to RTC_ACK5 register. K5 is calculated as follows: K5=B5/1000000*65536, B5 is the segment factor of crystal oscillator' quadratic curve. For example, the value of K5 is 25257.
0x0004083C		Check sum 2	INV (SUM (0x40828, 0x40838))
0x00040840	ACTI	Fixed point temperature of crystal 1	Load to RTC_ACTI register, such as 0x1800
0x00040844		Check sum 1	INV (SUM (0x40840, 0x40840))
0x00040848	ACTI	Fixed point temperature of crystal 2	Load to RTC_ACTI register, such as 0x1800

0x0004084C		Check sum 2	INV (SUM (0x40848, 0x40848))
0x00040850	KTEMP x(x=4 ~1)	Temperature section division settings 1	Load to RTC_ACKTEMP register, such as 0x3C2800EC
0x00040854		Check sum 1	INV (SUM (0x40850, 0x40850))
0x00040858	KTEMP x(x=4 ~1)	Temperature section division settings 2	Load to RTC_ACKTEMP register, such as 0x3C2800EC
0x0004085C		Check sum 2	INV (SUM (0x40858, 0x40858))
…			Reserved.
0x00040CE0		BAT_R offset 1	(3.6-BAT measure result) * 1000, resister division
0x00040CE4		BAT_C offset 1	(3.6-BAT measure result) * 1000, cap division
0x00040CE8		Check sum 1	INV (SUM (0x40CE0, 0x40CE4))
0x00040CEC			Reserved.
0x00040CF0		BAT_R offset 2	(3.6-BAT measure result) * 1000, resister division
0x00040CF4		BAT_C offset 2	(3.6-BAT measure result) * 1000, cap division
0x00040CF8		Check sum 2	INV (SUM (0x40CF0, 0x40CF4))
0x00040CFC			Reserved.
0x00040D00	P1/P0	RTC_ACP1/0 set 1	Load the high 16 bits to RTC_ACP1 register, such as 1060; Load the low 16 bits to RTC_ACP0, such as -214.
0x00040D04	P2′	RTC_ACP2 set 1	The value in this register is recorded as P2′, such as -19746971. According to the formula P2=P2′+(Tr-Tm)*256 to calculate P2, and load P2 to RTC_ACP2 register.
0x00040D08	P5	RTC_ACP5 set 1	Load the high 16 bits to RTC_ACP5 register, such as 6444 and the low 16 bits are abandoned.
0x00040D0C	P7/P6′	RTC_ACP 7/6 set 1	Load the high 16 bits to RTC_ACP7 register, such as 0. Load the low 16 bits to P6′ register, such as 1342. According to the formula: P6=a*P6′ to calculate P6, where a=PCLK/6553600.
0x00040D10		Check Sum set 1	INV (SUM (0x40DE0, 0x40DEC))
0x00040D14	P1/P0	RTC_ACP1/0 set 2	Load the high 16 bits to RTC_ACP1 register, such as 1060; Load the low 16 bits to RTC_ACP0, such as -214.

0x00040D18	P2′	RTC_ACP2 set 2	The value in this register is recorded as P2′, such as -19746971. According to the formula P2=P2′+(Tr-Tm)*256 to calculate P2, and load P2 to RTC_ACP2 register.
0x00040D1C	P5	RTC_ACP5 set 2	Load the high 16 bits to RTC_ACP5 register, such as 6444 and the low 16 bits are abandoned.
0x00040D20	P7/P6′	RTC_ACP 7/6 set 2	Load the high 16 bits to RTC_ACP7 register, such as 0; Load the low 16 bits to P6′ register, such as 1342. According to the formula: P6=a*P6′ to calculate P6, where a=PCLK/6553600.
0x00040D24		Check Sum set 2	INV (SUM (0x40DF4, 0x40E00))
0x00040D28		AVCC gain 1	Pre-trim result/3.3 * 10000
0x00040D2C		DVCC gain 1	Pre-trim result/3.3 * 10000
0x00040D30		BGP gain 1	Pre-trim result/1.2 * 10000
0x00040D34		RCL gain 1	Pre-trim result/32768 * 10000
0x00040D38		RCH gain 1	Pre-trim result/6553600 * 10000
0x00040D3C		Check sum 1	INV(SUM(0x40D28, 0x40D38))
0x00040D40		AVCC gain 2	Pre-trim result/3.3 * 10000
0x00040D44		DVCC gain 2	Pre-trim result/3.3 * 10000
0x00040D48		BGP gain 2	Pre-trim result/1.2 * 10000
0x00040D4C		RCL gain 2	Pre-trim result/32768 * 10000
0x00040D50		RCH gain 2	Pre-trim result/6553600 * 10000
0x00040D54		Check sum 2	INV(SUM(0x40D40, 0x40D50))
0x00040D58		ID word 0, Backup 1	
0x00040D5C		ID word 1, Backup 1	
0x00040D60		ID Check sum 1	INV (SUM (0x40D58, 0x40D5C))
0x00040D64		ID word 0, Backup 2	
0x00040D68		ID word 1, Backup 2	
0x00040D6C		ID Check sum 2	INV (SUM (0x40D64, 0x40D68))
0x00040D70	Tr	Real Temperature 1 (from tmp275)	According to the formula P2=P2′+(Tr-Tm)*256 to calculate P2, and load P2 to RTC_ACP2 register.

0x00040D74	Tm	Measure Temperature 1 (from ADC)	
0x00040D78		Temp Check sum 1	INV(SUM(0x40D70, 0x40D74))
0x00040D7C	Tr	Real Temperature 2 (from tmp275)	According to the formula P2=P2′+(Tr-Tm)*256 to calculate P2, and load P2 to RTC_ACP2 register.
0x00040D80	Tm	Measure Temperature 2 (from ADC)	
0x00040D84		Temp Check sum 2	INV (SUM (0x40D7C, 0x40D80))
0x00040D88			Reserved.
0x00040D8C			Reserved.
0x00040D90		Measure LCD LDO gain 1	Pre-trim result/3.3 * 10000
0x00040D94		VLCD setting 1	
0x00040D98		LCD LDO Check sum 1	INV (SUM (0x40D90, 0x40D94))
0x00040D9C		Measure LCD LDO gain 2	Pre-trim result/3.3 * 10000
0x00040DA0		VLCD setting 2	
0x00040DA4		LCD LDO Check sum 2	INV (SUM (0x40D9C, 0x40DA0))
0x00040DC0		Analog trim data1	Program during CP flow for analog parameter
0x00040DC4		0xFFFFFFFF	
0x00040DC8		0xFFFFFFFF	
0x00040DCC		Checksum1	INV (SUM (0x40DC0, 0x40DC8)), the data of 0x00040DC8 address is replaced by 0xFFFFFFFF.
0x00040DD0		Analog trim data2.	Program during CP flow for analog parameter
0x00040DD4		0xFFFFFFFF	
0x00040DD8		0xFFFFFFFF	
0x00040DDC		Checksum2	INV (SUM (0x40DD0, 0x40DD8)), the data of 0x00040DD8 address is replaced by 0xFFFFFFFF.
…			
0x00040400	a1	ADC coefficient 1	Vdc=a1/100000000*X+b1/100000000 (32 bits

0x00040404	b1	of ADC_CHx channel in 3.3V system under no divider mode condition	complement)
0x00040408	a2	ADC coefficient 1 of ADC_CHx channel in 3.3V system under resistive divider mode condition	Vdc=a2/100000000*X+b2/100000000 (32 bits complement)
0x0004040C	b2		
0x00040410	a3	ADC coefficient 1 of ADC_CHx channel in 3.3V system under capacitive divider mode condition	Vdc=a3/100000000*X+b3/100000000 (32 bits complement)
0x00040414	b3		
0x00040418	a4	ADC coefficient 1 of VDD channel in 3.3V system under resistive divider mode condition	Vdc=a4/100000000*X+b4/100000000 (32 bits complement)
0x0004041C	b4		
0x00040420	a5	ADC coefficient 1 of VDD channel in 3.3V system under capacitive divider mode condition	Vdc=a5/100000000*X+b5/100000000 (32 bits complement)
0x00040424	b5		
0x00040428	a6	ADC coefficient 1 of BATRTC channel in 3.3V system under resistive divider mode condition	Vdc=a6/100000000*X+b6/100000000 (32 bits complement)
0x0004042C	b6		
0x00040430	a7	ADC coefficient 1 of BATRTC channel in 3.3V system under capacitive divider mode condition	Vdc=a7/100000000*X+b7/100000000 (32 bits complement)
0x00040434	b7		
0x00040438		Checksum1	INV(SUM(0x00040400, 0x00040434))
0x0004043C			Reserved.
0x00040440	a1	ADC coefficient 2 of ADC_CHx	Vdc=a1/100000000*X+b1/100000000 (32 bits complement)
0x00040444	b1		

		channel in 3.3V system under no divider mode condition	
0x00040448	a2	ADC coefficient 2 of ADC_CHx channel in 3.3V system under resistive divider mode condition	Vdc=a2/100000000*X+b2/100000000 (32 bits complement)
0x0004044C	b2		
0x00040450	a3	ADC coefficient 2 of ADC_CHx channel in 3.3V system under capacitive divider mode condition	Vdc=a3/100000000*X+b3/100000000 (32 bits complement)
0x00040454	b3		
0x00040458	a4	ADC coefficient 2 of VDD channel in 3.3V system under resistive divider mode condition	Vdc=a4/100000000*X+b4/100000000 (32 bits complement)
0x0004045C	b4		
0x00040460	a5	ADC coefficient 2 of VDD channel in 3.3V system under capacitive divider mode condition	Vdc=a5/100000000*X+b5/100000000 (32 bits complement)
0x00040464	b5		
0x00040468	a6	ADC coefficient 2 of BATRTC channel in 3.3V system under resistive divider mode condition	Vdc=a6/100000000*X+b6/100000000 (32 bits complement)
0x0004046C	b6		
0x00040470	a7	ADC coefficient 2 of BATRTC channel in 3.3V system under capacitive divider mode condition	Vdc=a7/100000000*X+b7/100000000 (32 bits complement)
0x00040474	b7		
0x00040478		Checksum2	INV(SUM(0x00040440, 0x00040474))
0x0004047C			Reserved.
0x00040480	A1	ADC coefficient 1 of ADC_CHx channel in 5V	Vdc=A1/100000000*X+B1/100000000 (32 bits complement)
0x00040484	B1		

		system under no divider mode condition	
0x00040488	A2	ADC coefficient 1 of ADC_CHx channel in 5V system under resistive divider mode condition	Vdc=A2/100000000*X+B2/100000000 (32 bits complement)
0x0004048C	B2		
0x00040490	A3	ADC coefficient 1 of ADC_CHx channel in 5V system under capacitive divider mode condition	Vdc=A3/100000000*X+B3/100000000 (32 bits complement)
0x00040494	B3		
0x00040498	A4	ADC coefficient 1 of VDD channel in 5V system under resistive divider mode condition	Vdc=A4/100000000*X+B4/100000000 (32 bits complement)
0x0004049C	B4		
0x000404A0	A5	ADC coefficient 1 of VDD channel in 5V system under capacitive divider mode condition	Vdc=A5/100000000*X+B5/100000000 (32 bits complement)
0x000404A4	B5		
0x000404A8	A6	ADC coefficient 1 of BATRTC channel in 5V system under resistive divider mode condition	Vdc=A6/100000000*X+B6/100000000 (32 bits complement)
0x000404AC	B6		
0x000404B0	A7	ADC coefficient 1 of BATRTC channel in 5V system under capacitive divider mode condition	Vdc=A7/100000000*X+B7/100000000 (32 bits complement)
0x000404B4	B7		
0x000404B8		Checksum1	INV(SUM(0x00040480, 0x000404B4))
0x000404BC			Reserved.
0x000404C0	A1	ADC coefficient 2 of ADC_CHx channel in 5V system under no	Vdc=A1/100000000*X+B1/100000000 (32 bits complement)
0x000404C4	B1		

		divider mode condition	
0x000404C8	A2	ADC coefficient 2 of ADC_CHx channel in 5V system under resistive divider mode condition	Vdc=A2/100000000*X+B2/100000000 (32 bits complement)
0x000404CC	B2		
0x000404D0	A3	ADC coefficient 2 of ADC_CHx channel in 5V system under capacitive divider mode condition	Vdc=A3/100000000*X+B3/100000000 (32 bits complement)
0x000404D4	B3		
0x000404D8	A4	ADC coefficient 2 of VDD channel in 5V system under resistive divider mode condition	Vdc=A4/100000000*X+B4/100000000 (32 bits complement)
0x000404DC	B4		
0x000404E0	A5	ADC coefficient 2 of VDD channel in 5V system under capacitive divider mode condition	Vdc=A5/100000000*X+B5/100000000 (32 bits complement)
0x000404E4	B5		
0x000404E8	A6	ADC coefficient 2 of BATRTC channel in 5V system under resistive divider mode condition	Vdc=A6/100000000*X+B6/100000000 (32 bits complement)
0x000404EC	B6		
0x000404F0	A7	ADC coefficient 2 of BATRTC channel in 5V system under capacitive divider mode condition	Vdc=A7/100000000*X+B7/100000000 (32 bits complement)
0x000404F4	B7		
0x000404F8		Checksum2	INV(SUM(0x000404C0, 0x000404F4))

5.Power system

V94XX power supply has the following features:

- Supporting 5.5V and 3.3V power supply;
- Supporting RTC independent battery. When RTCBAT is out of the battery power, RTC will be supplied by the main power.
- The GPIO ports are powered by VDD.
- The analog circuitry inside the chip is powered by AVCC;
- The digital circuitry inside the chip and PLL circuitry are powered by DVCC;
- Supporting low voltage monitoring and real-time monitoring battery voltage.

Note: the V9430 chip shortens AVCC and VDD internally, so:

1, Supporting 3.3V power supply only, VDD input voltage range: 2.2~3.6V.

2, The analog circuitry inside the chip is powered by VDD.

3, The AVCCLDO should be power down.

4, The AVCC_LV detection should be power down.

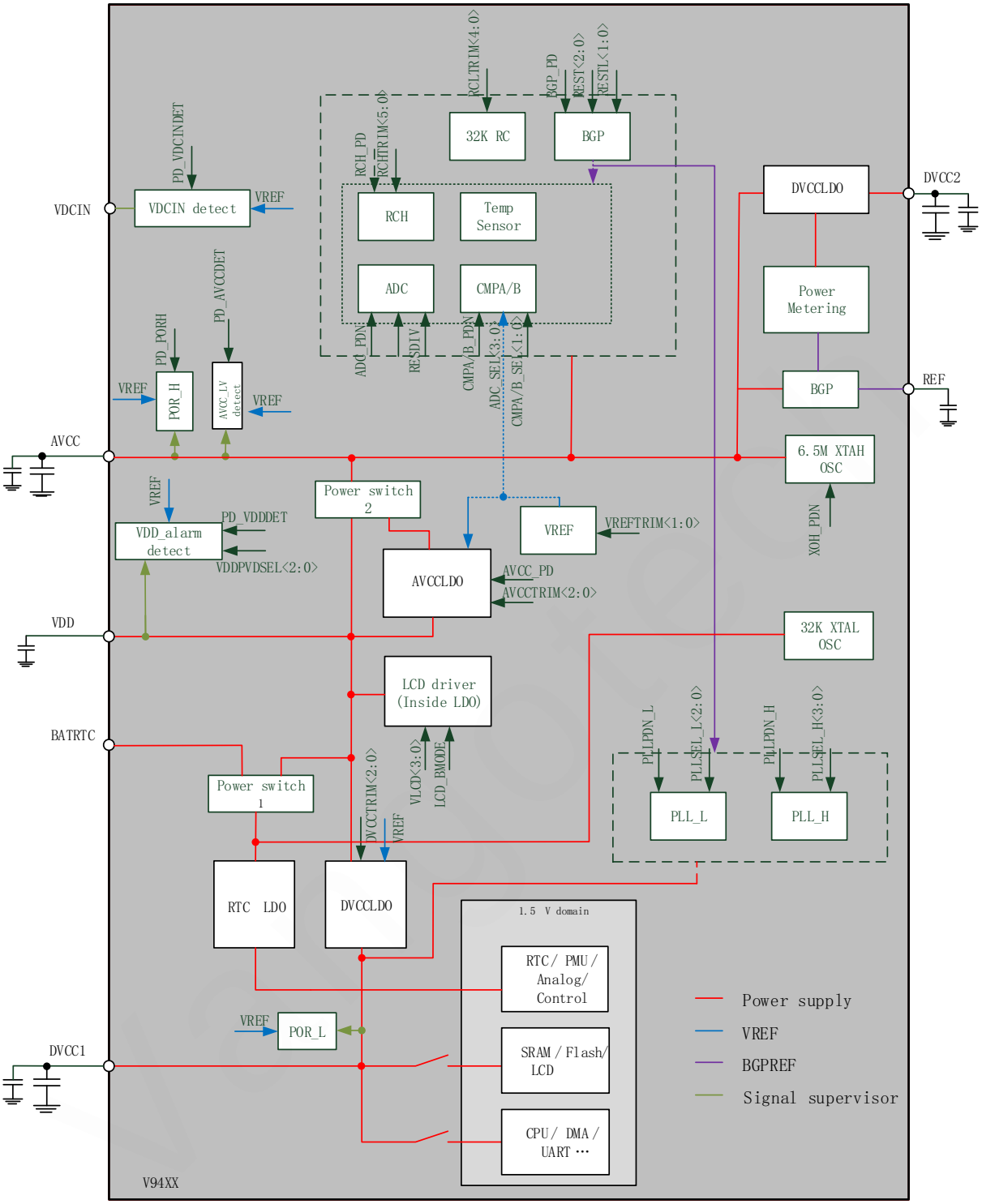

Figure 5-1 V94XX Power System Block Diagram

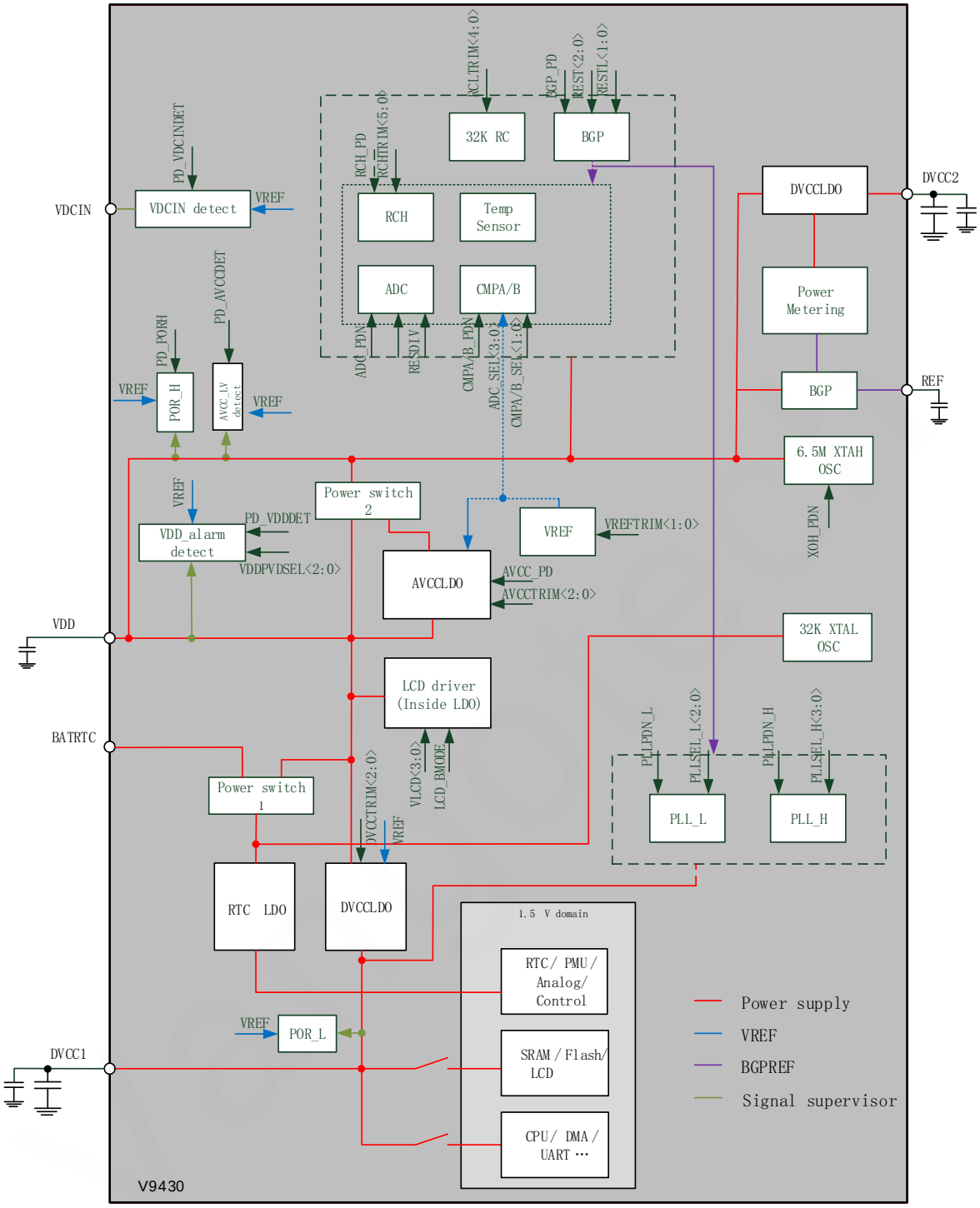

Figure 5-2 V9430 Power System Block Diagram

5.1. Register Location

Table 5-1 Register Location of ANA Controller for Power (ANA Base: 0x40014200)

Name	Type	Address	Description	Default
ANA_REG5	R/W	0x0014	Analog register 5	0x00
ANA_REG6	R/W	0x0018	Analog register 6	0x00
ANA_REG7	R/W	0x001C	Analog register 7	0x00
ANA_REG8	R/W	0x0020	Analog register 8	0x00
ANA_REGA	R/W	0x0028	Analog register 10	0x00
ANA_REGF	R/W	0x003C	Analog register 15	0x00
ANA_CTRL	R/W	0x0050	Analog control register	0x0000000
ANA_CMPOUT	R	0x0054	Comparator result register	0x0030
ANA_INTSTS	R/C	0x0060	Analog interrupt status register	0x0000
ANA_INTEN	R/W	0x0064	Analog interrupt enable register	0x0000

5.2. Register Definition

5.2.1. ANA_REG5 Register

Table 5-2 Description of Each Bit in ANA_REG5 for Power

Bit	Name	Function	Notes
6	PD_AVCCDET	Power down AVCC low voltage detector for AVCC.	0: Power-up AVCCLV detector. 1: Power-down detector.

5.2.2. ANA_REG6 Register

Table 5-3 Description of Each Bit in ANA_REG6 for Power

Bit	Name	Function	Notes
7	BATRTCDISC	Discharge the BATRTC battery. Discharge resistance is 1.7k, and the discharge current is Vbatrtc/1.7k.	0: Disable 1.7k resistor from BATRTC to GND. 1: Enable 1.7k resistor from BATRTC to GND.

5.2.3. ANA_REG7 Register

Table 5-4 Description of Each Bit in ANA_REG7 for Power

Bit	Name	Function	Notes
7:0	-	Reserved.	0

5.2.4. ANA_REG8 Register

Table 5-5 Description of Each Bit in ANA_REG8 for Power

Bit	Name	Function	Notes
3: 0	-	Reserved.	0
6:4	VDDPVDSEL[2:0]	Voltage selection of VDD power detector, the setting in this register will affect the status of VDDALARM.	000: 4.5V 001: 4.2V 010: 3.9V 011: 3.6V 100: 3.2V 101: 2.9V 110: 2.6V 111: 2.3V
7	PD_AVCCLDO	AVCCLDO control register, and control power-down or power-up of LDO.	0: Power up LDO, Voltage of AVCC pin is 3.3V. 1: Power down LDO, AVCC connect to VDD through a switch, and the switch resistor refer to table 1-4. AVCCLDO can be power down only when power supply less than 3.6V.

5.2.5. ANA_REG9 Register

Table 5-6 Description of Each Bit in ANA_REG9 for Power

Bit	Name	Function	Notes
7	PD_VDDDET	Power down VDD input VDDALARM detector. This module powered by VDD.	0: Power up. 1: Power down.

5.2.6. ANA_REGA Register

Table 5-7 Description of Each Bit in ANA_REGA for Power

Bit	Name	Function	Notes
6:0		Reserved.	Default value is 0x00, and must be set to 0x0A.
7	PD_VDCINDET	Power down VDCIN detector.	0: Power up. 1: Power down.

5.2.7. ANA_REGF Register

Table 5-8 Description of Each Bit in ANA_REGF for Power

Bit	Name	Function	Notes
1:0		Reserved.	0
2	AVCCO_EN	Enable AVCC_OUT pin to output AVCC level.	0: High resistance. 1: AVCC_OUT pin output AVCC level, and it can be used to drive small power module.

5.2.8. ANA_CTRL Register

Table 5-9 Description of ANA_CTRL Register for Power

Bit	Name	Type	Description	Default
26	PDNS2	R/W	This register is used to set the deep sleep behavior when VDDALARM is 0. (Still need to consider the PDNS setting). 0: Can't enter deep-sleep mode when VDDALARM is 0. When VDDALARM is 1, the system can enter deep-sleep mode. The system will wake-up from deep-sleep mode automatically as long as VDDALARM is 0. 1: Can enter deep-sleep mode no-matter which state	0x0

			VDDALARM is.	
17:16			Reserved.	0
6	PDNS	R/W	This register is used to set the deep sleep behavior when VDCINDROP is 0. (Still need to consider the PDNS setting) 0: Can't enter deep-sleep mode when VDCINDROP is 0. When VDCINDROP is 1, the system can enter deep-sleep mode. The system will wake-up from deep-sleep mode automatically as long as VDCINDROP became 0. 1: Can enter deep-sleep mode no-matter which state VDCINDROP is.	0x0
5:4			Reserved.	0

5.2.9. ANA_CMPOUT Register

Table 5-10 Description of ANA_CMPOUT Register for Power

Bit	Name	Type	Description	Default
10	AVCCLV	R	AVCC low power status. And hysteresis voltage of AVCCLV is 20mV~30mV. 0: AVCC is higher than 2.5V. 1: AVCC is lower than 2.5V.	0x0
8	VDCINDROP	R	VDCIN drop status. 0: VDCIN is not drop (VDCIN higher than threshold). 1: VDCIN is drop (VDCIN lower than threshold).	0x0
7	VDDALARM	R	This bit shows the output of VDDALARM. 0: Voltage of VDD is higher than voltage setting by VDDPVDSEL. 1: Voltage of VDD is lower than voltage setting by VDDPVDSEL.	0x0
6:0		R	Reserved.	0

5.2.10. ANA_INSTS Register

Table 5-11 Description of ANA_INTSTS Register for Power

Bit	Name	Type	Description	Default

11	INTSTS11	R/C	Interrupt flag of sleep mode entry under VDCINDROP is 0(i.e. VDCIN higher than threshold), this interrupt will be generated when VDCINDROP is 0 and the entry of sleep or deep-sleep modes are detected. Programmer can enable this interrupt to force CPU awake from sleep or deep-sleep mode when VDCINDROP is 0 and the entry of sleep or deep-sleep modes are detected. Read 0: No Sleep mode entry interrupt. Read 1: Sleep mode entry interrupt is happened. Write 0: No effect. Write 1: clear this bit.	0x0
10	INTSTS10	R/C	Interrupt flag of AVCCLV (AVCC low power status), this interrupt will be generated when AVCCLV rising or falling. Read 0: No AVCCLV interrupt. Read 1: AVCCLV interrupt is happened. Write 0: No effect. Write 1: clear this bit.	0x0
8	INTSTS8	R/C	Interrupt flag of VDCINDROP (VDCIN status), this interrupt will be generated when VDCINDROP rising or falling. Read 0: No VDCIN interrupt. Read 1: VDCIN interrupt is happened. Write 0: No effect. Write 1: clear this bit.	0x0
7	INTSTS7	R/C	Interrupt flag of VDDALARM (VDD status), this interrupt will be generated when VDDALARM rising or falling. Read 0: No VDDALARM interrupt. Read 1: VDDALARM interrupt is happened. Write 0: No effect. Write 1: clear this bit.	0x0
6:0	-	-	Reserved.	0

5.2.11. ANA_INTEN Register

Table 5-12 Description of ANA_INTEN Register for Power

Bit	Name	Type	Description	Default
11	INTEN11	R/W	Interrupt and wake-up enable control of sleep mode entry, when VDCINDROP is 0 (i.e. VDCIN higher than threshold). Programmer can enable this interrupt to force CPU to wake from sleep or deep-sleep mode when VDCINDROP is 0 and the entry of sleep or deep-sleep modes are detected. 0: Disable Sleep mode entry interrupt and wake-up. 1: Enable Sleep mode entry interrupt and wake-up.	0x0
10	INTEN10	R/W	Interrupt and wake-up enable control of AVCCLV rising or falling. 0: Disable AVCCLV interrupt and wake-up. 1: Enable AVCCLV interrupt and wake-up.	0x0
9			Reserved.	0
8	INTEN8	R/W	Interrupt and wake-up enable control of VDCINDROP rising or falling. 0: Disable VDCIN interrupt and wake-up. 1: Enable VDCIN interrupt and wake-up.	0x0
7	INTEN7	R/W	Interrupt and wake-up enable control of VDDALARM rising or falling. 0: Disable VDDALARM interrupt and wake-up. 1: Enable VDDALARM interrupt and wake-up.	0x0
6:0			Reserved.	0

5.3. 3.3V Regulator Circuit(AVCC)

In V94XX, the analog circuit is powered by the 3.3V regulator circuit (AVCC). AVCC is controlled via the bit 'PD_AVCCLDO' (bit [7] of ANA_REG8). AVCCLDO can be power down only when power supply less than 3.6V.

AVCC has a driving capability of 30 mA.

AVCC can output from AVCC_OUT, and is controlled by the bit 'AVCCO_EN' (bit [2] of ANA_REGF). When AVCCO_EN=1, AVCC_OUT will output AVCC level. Otherwise, it will be in high-z state. AVCC_OUT has a driving capability of 20mA. The sum of the driving capability of AVCC pin and AVCC_OUT pin cannot exceed 30mA.

It is recommended to externally decouple the pin 'AVCC' with a 10uF capacitor in parallel with a 0.1-uF capacitor.

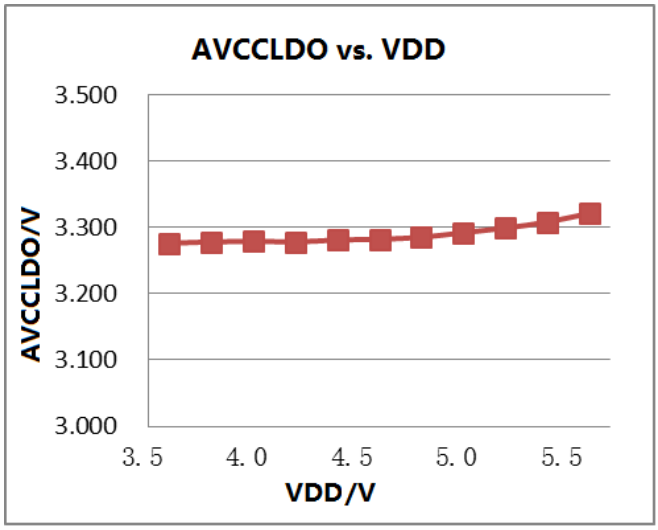

Figure 5-3 AVCCLDO Output and VDD Power Input

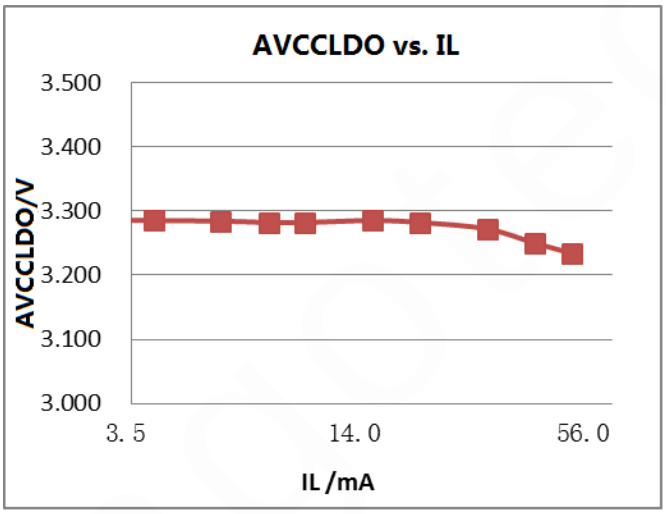

Figure 5-4 AVCCLDO Output and The Load Current

5.4. Digital Power Supply(DVCC)

In V94XX, PLL clock generation circuit and core digital blocks are powered by the digital power supply circuit. This circuit will output a stable voltage (DVCC, i.e. 1.5V) when power input (AVCC) is higher than 1.7V.

The digital power supply circuit has a driving capability of 35mA. When the load current through the circuits is less than 35mA, the digital power supply will be stable; when the load current is higher than 35mA, the higher the load current is, the lower the digital power supply will be.

This power supply circuit will not stop working until the system is powered off.

It is recommended to externally decouple the pin 'DVCC' with a 10uF capacitor in parallel with a 0.1-uF capacitor.

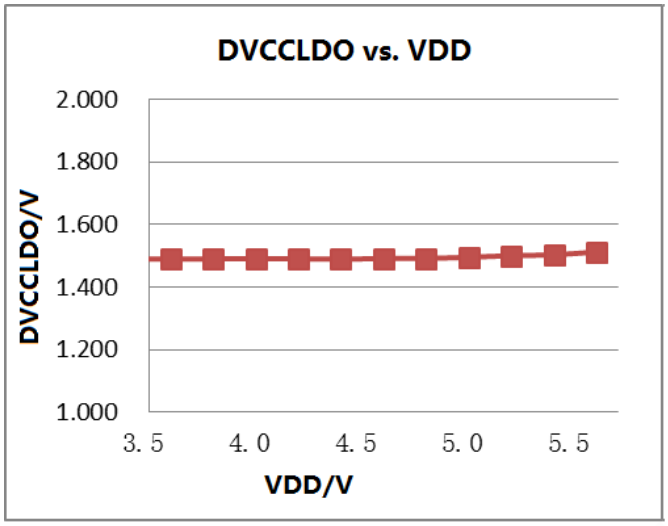

Figure 5-5 DVCCLDO Output and VDD Power Input

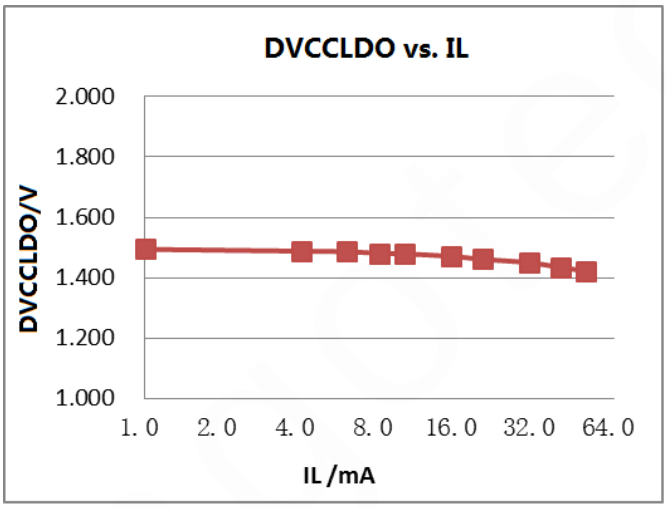

Figure 5-6 DVCCLDO Output and The Load Current

Power Supply Supervisor

5.5. Power Supervisor

5.5.1. VDCIN Supervisor

In V94XX, the main power is input into the pin 'VDCIN' after a resistive divider. The input voltage on the pin 'VDCIN' is monitored continuously by the power supply supervisor.

When the input voltage on the pin 'VDCIN' is lower than 1.3V(typical), a power-down event will occur, the bit 'VDCINDROP'('bit 8' of 'ANACMP_OUT') will be set to '1', and a power-down interrupt will be generated to MCU.

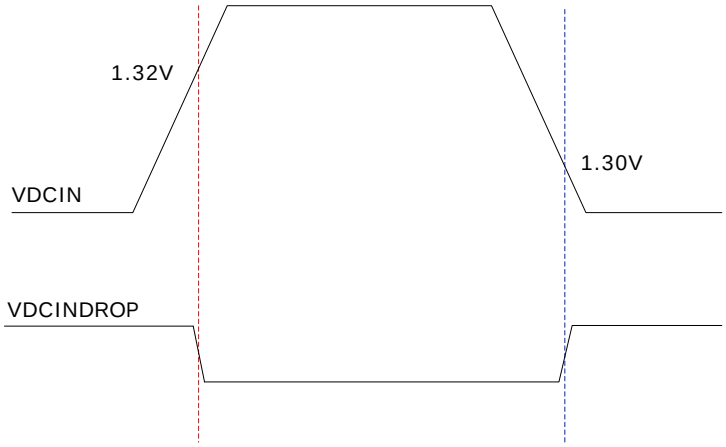

Figure 5-7 Relation Between VDCIN Input Signal and States of Flag Bits VDCINDROP

5.5.2. VDD Supervisor

Power alarm detector is designed to supervise the power state of VDD. When VDD is lower than the specified voltage threshold defined by VDDPVDSEL<2:0> in ANA_REG8, the power alarm signal will inform MCU by interrupt.

VDDPVDSEL<2:0>	Voltage selection of power detector	000: 4.5V; 001:4.2V; 010: 3.9V; 011: 3.6V; 100: 3.2V; 101: 2.9V; 110: 2.6V; 111: 2.3V

5.5.3. AVCC Supervisor

AVCCLV module is designed to supervise the power state of AVCC. When AVCC is lower than 2.5V, an LV signal will inform MCU by interrupt, in this situation, the ADC precision will be degraded much, so do not use ADC to measure any signal.

5.6. Power Switch

5.6.1. Power Switch 1

Power switch 1 is designed to switch RTC power between VDD and BATRTC. When VDD is higher than BATRTC, the switch will select VDD to be the power of RTC domain. Otherwise BATRTC will be the power of RTC.

5.6.2. Power Switch 2

Power switch 3 is designed to select AVCC voltage input source. When PD_AVCCLDO (ANA_REG8 bit 7) is set to 0, Voltage of AVCC pin is 3.3V. When PD_AVCCLDO (ANA_REG8 bit 7) is set to 1, AVCC connect to VDD through a switch, and the switch resistor refer to table 1-4. AVCCLDO can be power down only

when power supply less than 3.6V.

5.7. Application Note

Two power supply: VDD is powered by one power source. BATRTC is powered by another power source.

One power supply: VDD and BATRTC are connected together, and powered by one power source.

Vangotech

6.Working Model

6.1. Introduction

The PMU controller is used to control the sleep and deep sleep mode of V94XX. There are 16 IOs integrated inside the PMU controller which can wake-up the chip from sleep or deep-sleep mode. The deep sleep mode will power off CPU and all peripherals including system SRAM, LCD controller and other GPIOs not included in PMU controller. Only RTC, analog controller and UART 32K module will be alive under this mode.

6.2. Features

--Deep mode entry/exit control, and corresponding module be reset when MCU wake up from deep sleep mode, the program starts to run from 0 address.

--Password protection to avoid entry deep-sleep mode in un-expected event.

--16 GPIOs with wake-up and interrupt function.

--Interrupt generation.

--When entry sleep and deep sleep mode, system clock will power down. When MCU wake up from sleep mode, hardware will switch the system clock to the setting before entry sleep mode. When MCU wake up from deep sleep mode, the hardware will switch the system clock to RCH automatically.

-- When wake up from deep sleep mode, the program will start from beginning and reset some corresponding modules.

--Crystal absent detect and interrupt.

--Embedded 256 Bytes Retention SRAM which can keep necessary data under deep-sleep mode.

6.3. Functional Block Diagram

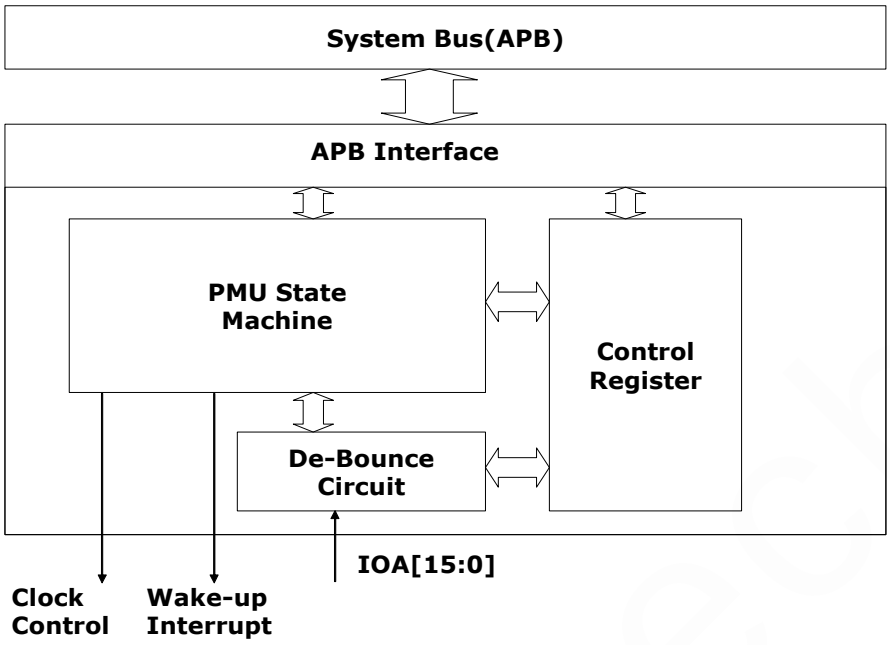

Figure 6-1 Functional Block Diagram of PMU Controller

6.4. Register Location

Table 6-1 Working model Register Location of the PMU Controller (PMU Base: 0x40014000)

Name	Type	Address	Description	Default
PMU_DSLEEPEN	R/W	0x0000	PMU deep sleep enable register	0x00
PMU_DSLEEPPASS	R/W	0x0004	PMU deep sleep password register	0x00
PMU_CONTROL	R/W	0x0008	PMU control register	0x0000
PMU_STS	R/C	0x000C	PMU Status register	0x0000074
VERSIONID	R	0x003C	Version ID of V94XX	--

Table 6-2 working model Register Location of the PMU Retention RAM (PMU Retention RAM Base: 0x40014400)

Name	Type	Address	Description	Default
PMU_RAM0	R/W	0x0000	PMU 32 bits Retention RAM 0	--
PMU_RAM1	R/W	0x0004	PMU 32 bits Retention RAM 1	--
PMU_RAM2	R/W	0x0008	PMU 32 bits Retention RAM 2	--
			.....	

PMU_RAM63	R/W	0x00FC	PMU 32 bits Retention RAM 63	--

Table 6-3 Register Location of ANA Controller for Working Mode (ANA Base: 0x40014200)

Name	Type	Address	Description	Default
ANA_CTRL	R/W	0x0050	Analog control register	0x0000000

6.5. Register Definitions

6.5.1. PMU_DSLEEPEN Register

To enable the deep sleep mode, programmer should write the correct password (0xAA5555AA) into PMU_DSLEEPPASS register first, and then write 0x55AAAA55 to PMU_DSLEEPEN register. Under debug mode (MODE is 0), it is not allowed to enter deep-sleep mode, and all writes to this register will be discarded. If the chip is in deep-sleep mode and MODE change from normal mode to debug mode, it will wake-up automatically to enable the access of ICE interface.

Table 6-4 Description of PMU_DSLEEPEN Register

Bit	Name	Type	Description	Default
31	WKU	R	Current wake-up signal status, this bit reflects the wake-up status received by PMU controller, programmer must make sure this bit is 0 before entering deep-sleep mode, otherwise the system will wake-up immediately because of non-clear WKU event.	0x0
30:0	-	-	Reserved.	0

6.5.2. PMU_DSLEEPPASS Register

Table 6-5 Description of PMU_DSLEEPPASS Register

Bit	Name	Type	Description	Default
31:1	-	-	Reserved.	0
0	UNLOCK	R	This bit indicates the entry of deep-sleep mode has been unlocked and is ready to entry deep-sleep mode. To unlock the deep sleep mode, programmer should write 0xAA5555AA to this register first. This bit will be cleared immediately after any register read or write to any PMU register, including ICE read/write. So programmer should set correct password to PMU_DSLEEPEN immediately.	0x0

6.5.3. PMU_CONTROL Register

Table 6-6 Description of PMU_CONTROL Register

Bit	Name	Type	Description	Default
31:16	-	-	Reserved.	0
15:8	PWUPCYC	R/W	Power-up cycle count, this register controls the power-up wait time when a wake-up even is received. The unit is 32K clock period.	0x0
7:6	-	-	Reserved.	0
5	PLLL_SEL	R/W	Low speed PLL input clock selection. 0: 32K XTAL 1: 32K RC.	0x0
4	PLLH_SEL	R/W	High speed PLL input clock selection. 0: 6.5MHz RC 1: 6.5536MHz XTAL	0x0
3	INT_6M_EN	R/W	6.5536M XTAL absent interrupt enable register. This bit is used to control the interrupt signal output to CPU. When this bit is set to 1, if 6.5536M crystal is removed or broken, an interrupt will be issued to CPU. And if this event is happened during sleep or deep sleep, CPU will be waked up.	0x0
2	INT_32K_EN	R/W	32K XTAL absent interrupt enable register. This bit is used to control the interrupt signal output to CPU. When this bit is set to 1, if 32K crystal is removed or broken, an interrupt will be issued to CPU. And if this event is happened during sleep or deep sleep, CPU will be waked up.	0x0
1	RTCCLK_SEL	R/W	RTC Clock selection. 0: 32K XTAL 1: 32K RC	0x0
0	INT_IOA_EN	R/W	IOA0~15 interrupt enable register. This bit is used to control the interrupt signal output to CPU. User can set some of the IO pins as wake-up source during sleep or deep sleep.	0x0

6.5.4. PMU_STS Register

Table 6-7 Description of PMU_STS Register

Bit	Name	Type	Description	Default
31:25	-	-	Reserved.	0
24	MODE	R	This register shows the current status of MODE pin. 0: Debug mode. 1: Normal mode.	--
23:7			Reserved.	0
6	DPORST	R/C	This bit indicated if the last reset is caused by internal digital power-on reset signal, and this bit is set to 1 only when the chip power supply first time (BATRTC will be discharged also). Write 1 to clear this bit.	0x1
5	PORST	R/C	This bit indicated if the last reset is caused by PORH reset or PORL reset. PORH reset is caused when AVCCLDO voltage is lower than 2.08V. PORL reset is caused when DVCCLDO voltage is lower than 1.3V. Write 1 to clear this bit.	0x1
4	EXTRST	R/C	This bit indicated if the last interrupt is cause by external reset signal. Write 1 to clear this bit.	0x1
3	EXIST_6M	R	6.5536M XTAL exist status register. This bit represents 6.5536M XTAL is existed or absent. After 6.5536MHz XTAL (BIT7 of ANA_REG3 is configured as 1) is turned on, the state bit will refresh, otherwise it will remain in its previous state. 0: 6.5536M crystal is absent. 1: 6.5536M crystal is existed.	0x0
2	EXIST_32K	R	32K XTAL exist status register. This bit represents 32K XTAL is existed or absent. 0: 32K crystal is absent. 1: 32K crystal is existed.	0x1
1	INT_6M	R/C	This bit represents the 6.5536M crystal absent interrupt status. When this bit is set to 1, it means the 6.5536M crystal is removed or broken. When the EXIST_6M state goes from 1 to 0, the state position is 1. Write 1 to this bit can clear this flag to 0.	0x0

0	INT_32K	R/C	This bit represents the 32K crystal absent interrupt status. When this bit is set to 1, it means the 32K crystal is removed or broken. When the EXIST_32K state goes from 1 to 0, the state position is 1. Write 1 to this bit can clear this flag to 0.	0x0

6.5.5. ANA_CTRL Register

Table 6-8 Description of ANA_CTRL Register

Bit	Name	Type	Description	Default
26	PDNS2	R/W	This register is used to set the deep sleep behavior when VDDALARM is 0. (Still need to consider the PDNS setting). 0: Can't enter deep-sleep mode when VDDALARM is 0. When VDDALARM is 1, the system can enter deep-sleep mode. The system will wake-up from deep-sleep mode automatically as long as VDDALARM became 0. 1: Can enter deep-sleep mode no-matter which state VDDALARM is.	0x0
6	PDNS	R/W	This register is used to set the deep sleep behavior when VDCINDROP is 0 (Still need to consider the PDNS setting). 0: Can't enter deep-sleep mode when VDCINDROP is 0. When VDCINDROP is 1, the system can enter deep-sleep mode. The system will wake-up from deep-sleep mode automatically as long as VDCINDROP became 0. 1: Can enter deep-sleep mode no-matter which state VDCINDROP is.	0x0

6.6. Reset

After exit from each mode, some of the hardware module will be reset automatically, the following table shows the detail of reset of each module.

Table 6-9 Reset of Each Module under Different Events

Module	External Reset	Power-on Reset	Watch-dog Reset	M0-soft Reset	Exit RTC only	Wake up from		
						deep sleep	sleep	idle

					mode			
Cortex-M0	V	V	V	V	V	V	-	-
System SRAM	-	-	-	-	Data lost	Data lost	-	-
Retention SRAM	-	-	-	-	Data lost	-	-	-
PMU (IOA)	V	V	V	-	V	-	-	-
WDT	V	V	V	-	V	-	-	-
RTC	V*	V*	V*	-	V*	-	-	-
UART 32K 0	V	V	V	-	V	-	-	-
UART 32K 1	V	V	V	-	V	-	-	-
Analog Controller	V	V	V	-	V	-	-	-
LCD	V	V	V	V	V	V	-	-
GPIO (IOB~IOF)	V	V	V	V	V	V	-	-
MISC2	V	V	V	V	V	V	-	-
MISC	V	V	V	V	V	V	V	-
I2C	V	V	V	V	V	V	V	-
SPI1/SPI2	V	V	V	V	V	V	V	-
UART	V	V	V	V	V	V	V	-
ISO7816	V	V	V	V	V	V	V	-
TIMER	V	V	V	V	V	V	V	-
PWM	V	V	V	V	V	V	V	-
DMA	V	V	V	V	V	V	V	-
SRAM Controller	V	V	V	V	V	V	V	-
FLASH Controller	V	V	V	V	V	V	V	-

Note (V*): RTC registers without write protection can be reset under external reset or power-on reset or watch-dog reset, other registers cannot be reset under one of reset external reset or power-on reset or watch-dog reset events.

For different mode, the enable or disable of clock generated module will be controlled by hardware or software, the following tables shows the detail of clock status under each mode.

Table 6-10 Clock Source Enable or Disable in Different Modes

Clock Source	Power modes				
	RTC only	Deep sleep	Sleep	IDLE	Active
6.5536M RC	OFF	OFF	OFF	Controlled by RCHPD	
6.5536M XTAL	OFF	OFF	OFF	Controlled by XOHPDN	
PLLH	OFF	OFF	OFF	Controlled by PLLHPDN	
PLLL	OFF	OFF	OFF	Controlled by PLLLPDN	
32K RC	ON	ON	ON	ON	
32K XTAL	ON	ON	ON	ON	

Clock Source	Exit RTC only mode	Wake up from different modes		
		Deep sleep	Sleep	IDLE
6.5536M RC	ON	ON	Controlled by RCHPD	
6.5536M XTAL	OFF	OFF	Controlled by XOHPDN	
PLLH	OFF	OFF	Controlled by PLLHPDN	
PLLL	OFF	OFF	Controlled by PLLLPDN	
32K RC	ON	ON	ON	
32K XTAL	ON	ON	ON	

6.6.1. External Reset

The external reset pin (EXTRSTN) can reset most of the modules inside V94XX. In order to prevent the external noise couple into this pin, a de-glitch circuit is embedded in V94XX. The following diagram shows an example of how this de-glitch circuit works. The de-glitch time will increase accordingly when the RTCCLK pre-scaler is set to a non-zero value. For example, when RTCCLK pre-scaler is set to 1/4, the de-glitch time will be increased to 91*4 = 364 μs.

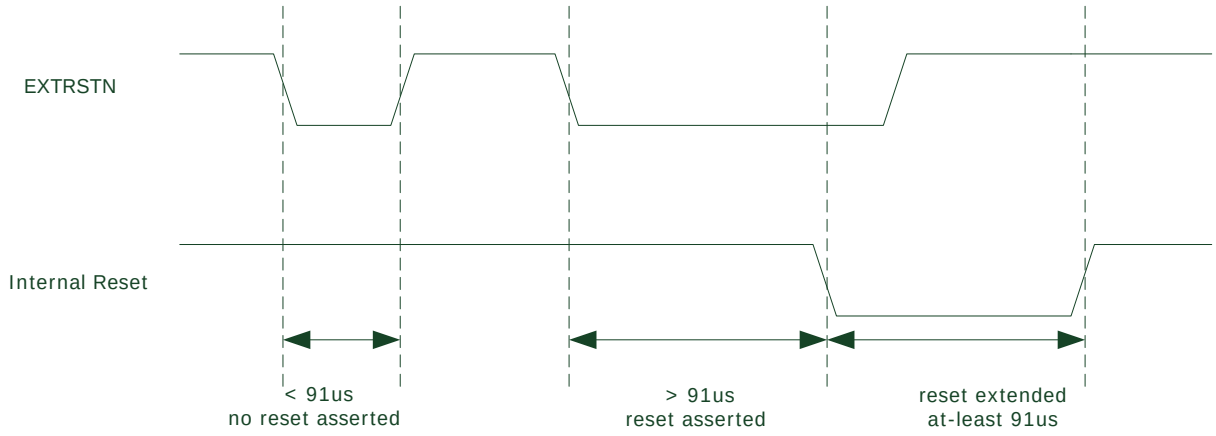

Figure 6-2 External Reset De-glitch Timing

6.6.2. WDT Reset

WDT's reset level is the same as POR.

6.6.3. POR Reset

The POR module can provide chip's internal reset, should work with external reset together.

6.6.4. M0-soft Reset

M0-soft reset instruction can reset the most modules in V94XX, details please refer to Figure 6-2.

6.6.5. Wake up from sleep /deep sleep/IDLE

Any interrupt can wake up the system from IDLE, some of them can wake up the system from sleep, and some of them can wake up the system from deep sleep.

Table 6-11 Interrupt Sources

Item	Vector address	Interrupt Nom.	Description	Enable bit of peripheral event	Flag of peripheral event	Wake-up source	
						Deep Sleep	Sleep
NMI	00000008h	-14	NMI				
HardFault	0000000Ch	-13	HardFault				
SVCall	0000002Ch	-5	SVCall				
PendSV	00000038h	-2	PendSV				

SysTick	0000003Ch	-1	SysTick				
PMU	00000040h	0	IOA0~15	PMU_CONTROL.0 and PMU_IOAWKUEN.0~15	PMU_IOAINTSTS.0~15	V	V
			32K crystal is removed or broken	PMU_CONTROL.2	PMU_STS.0	V	V
			6M crystal is removed or broken	PMU_CONTROL.3	PMU_STS.1		
RTC	00000044h	1	illegal time format	RTC_INTEN.1	RTC_INTSTS.1	V	V
			multi-second period is reach	RTC_INTEN.2	RTC_INTSTS.2	V	V
			multi-minute period is reach	RTC_INTEN.3	RTC_INTSTS.3	V	V
			multi-hour period is reach	RTC_INTEN.4	RTC_INTSTS.4	V	V
			mid-night (00:00) is reach	RTC_INTEN.5	RTC_INTSTS.5	V	V
			32K counter period is reach	RTC_INTEN.6	RTC_INTSTS.6	V	V
			illegal write to CE register	RTC_INTEN.8	RTC_INTSTS.8		
U32K0~1	00000048h 0000004Ch	2\3	Receiver data input	U32Kx_CTRL1.0	U32Kx_STS.0	V	V
			Receive parity error	U32Kx_CTRL1.1	U32Kx_STS.1	V	V
			Receive buffer overrun	U32Kx_CTRL1.2	U32Kx_STS.2	V	V
I2C	00000050h	4	Serial Interrupt	I2C_CTRL2.0	I2C_CTRL.3		
SPI1~2	00000054h \ 000000ACh	5\27	SPI Transmit	SPIx_TXSTS.14	SPIx_TXSTS.15		
			SPI Receive	SPIx_RXSTS.14	SPIx_RXSTS.15		

UART0~5	00000058h ~ 0000006Ch	6\7\8\9\10\11	Receive	UARTx_CTRL.3	UARTx_INTSTS.1		
			Transmit overrun	UARTx_CTRL.4	UARTx_INTSTS.2		
			Receive overrun	UARTx_CTRL.5	UARTx_INTSTS.3		
			Receive parity error	UARTx_CTRL.7	UARTx_INTSTS.4		
			Transmit done	UARTx_CTRL.8	UARTx_INTSTS.5		
ISO78160~1	00000070h ~ 00000074h	12\13	Receive	ISO7816x_CFG.5	ISO7816x_INFO.5		
			Transmit	ISO7816x_CFG.6	ISO7816x_INFO.6		
			Receive overrun	ISO7816x_CFG.7	ISO7816x_INFO.7		
Timer0~3	00000078h ~ 00000084h	14\15\16\17	Timer x overflow	TMRx_CTRL.3	TMRx_INT.0		
PWM0~3	00000088h ~ 00000094h	18\19\20\21	PWM timer overflow	PWMx_CTL.1	PWMx_CTL.0		
			Compare 0	PWMx_CCTL0.4	PWMx_CCTL0.0		
			Compare 1	PWMx_CCTL1.4	PWMx_CCTL1.0		
			Compare 2	PWMx_CCTL2.4	PWMx_CCTL2.0		
DMA	00000098h	22	Channel 0 package end	DMA_IE.0	DMA_STS.4		
			Channel 1 package end	DMA_IE.1	DMA_STS.5		
			Channel 2 package end	DMA_IE.2	DMA_STS.6		
			Channel 3 package end	DMA_IE.3	DMA_STS.7		
			Channel 0 frame end	DMA_IE.4	DMA_STS.8		
			Channel 1	DMA_IE.5	DMA_STS		

			frame end		.9		
			Channel 2 frame end	DMA_IE.6	DMA_STS .10		
			Channel 3 frame end	DMA_IE.7	DMA_STS .11		
			Channel 0 data abort	DMA_IE.8	DMA_STS .12		
			Channel 1 data abort	DMA_IE.9	DMA_STS .13		
			Channel 2 data abort	DMA_IE.10	DMA_STS .14		
			Channel 3 data abort	DMA_IE.11	DMA_STS .15		
FLASH	0000009Ch	23	checksum error	FLASH_CTRL.2	FLASH_IN T.0		
ANA	000000A0h	24	manual ADC conversion done	ANA_INTEN.0	ANA_INT STS.0		
			auto ADC conversion done	ANA_INTEN.1	ANA_INT STS.1		
			COMP1 rising or falling	ANA_INTEN.2	ANA_INT STS.2	V	V
			COMP2 rising or falling	ANA_INTEN.3	ANA_INT STS.3	V	V
			VDDALARM rising or falling	ANA_INTEN.7	ANA_INT STS.7	V	V
			VDCIN rising or falling	ANA_INTEN.8	ANA_INT STS.8	V	V
			AVCCLV rising or falling	ANA_INTEN.1 0	ANA_INT STS.10	V	V
			VDCINDROP is 0 and the entry of sleep or deep-sleep modes are detected	ANA_INTEN.1 1	ANA_INT STS.11	V	V
			ANA_REGx error	ANA_INTEN.1 2	ANA_INT STS.12	V	V

			TADC change over threshold	ANA_INTEN.13	ANA_INTSTS.13	V	V

6.7. Working Model

The following diagram shows the power state machine of V94XX.

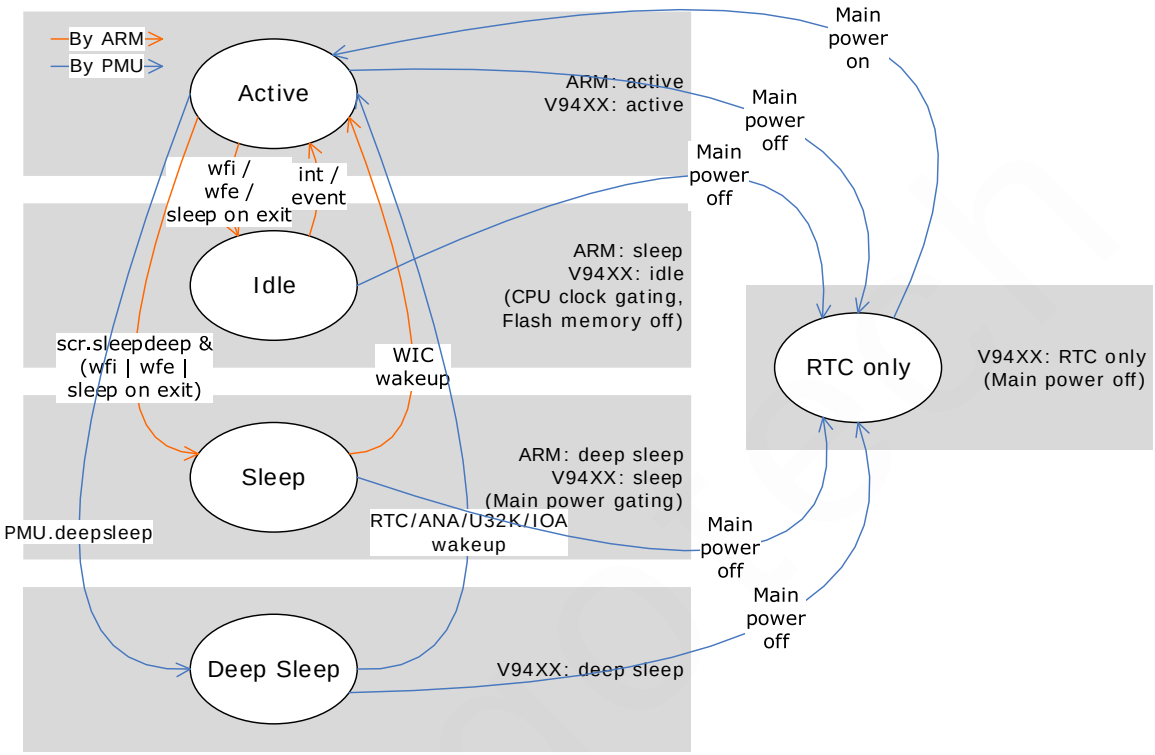

Figure 6-3 Power State Flow Chart of V94XX

According to the diagram above, idle mode or sleep is controlled by CPU directly, and the programmer only needs to execute corresponded instruction (WFI or WFE) to enter these two modes. For deep sleep mode, PMU controller will handle the entry and exit of this mode and it will always return to active mode after wake-up. Corresponded wake-up source must be set before entry deep sleep mode, this part should be taken care by software programmer. The following shows the wake-up source under each mode.

Note: (1) It should be noted that MCU could enter sleep mode or deep sleep mode only when MODE=1. If MCU execute instruction for entry sleep mode when MODE=0, MCU will enter idle mode. Before MCU enter deep sleep mode, programmer should configure PDNS (ANA_CTRL bit6) and PDNS2 (ANA_CTRL bit24) firstly, or judge the state of VDCINDROP and VDDALRAM. For details, please refer to ANA_CTRL register.

(2) When MCU wake up from sleep mode, hardware will switch the system clock to the setting before entry sleep mode. For example, the system clock is PLLL before entry sleep mode, the hardware will switch the system clock to PLLL when wake up from sleep mode. When MCU wake up from deep sleep mode, the hardware will switch the system clock to RCH automatically. Before entry IDLE mode and wake up from IDLE mode, the hardware does not change the system clock automatically.

(3) User can't select RTCCLK as system clock before entry sleep mode. System clock source control by CLKSEL (MISC2_CTRL bit2:0).

(4) When wake up from sleep mode, PLLL lock time is 1ms, and PLLH lock time is 15μs.

Table 6-12 Wake-up Source under Each Mode

INT Number	Source	Wake up from		
		deep sleep	sleep	idle
Event	-	-	-	-
NMI	SRAM Parity Error	-	-	V
0	PMU (Ext Int)	V	V	V
1	RTC	V	V	V
2	UART 32K 0	V	V	V
3	UART 32K 1	V	V	V
4	I2C	-	-	V
5	SPI1	-	-	V
6	UART0	-	-	V
7	UART1	-	-	V
8	UART2	-	-	V
9	UART3	-	-	V
10	UART4	-	-	V
11	UART5	-	-	V
12	ISO78160	-	-	V
13	ISO78161	-	-	V
14	TIMER0	-	-	V
15	TIMER1	-	-	V
16	TIMER2	-	-	V
17	TIMER3	-	-	V
18	PWM0	-	-	V
19	PWM1	-	-	V
20	PWM2	-	-	V
21	PWM3	-	-	V
22	DMA	-	-	V
23	FLASH	-	-	V
24	ANA	V	V	V
27	SPI2	-	-	V

6.8. Application Note

6.8.1. External IO Wake-up

All 16 IOAs can wake-up the system from sleep or deep-sleep mode. In order to prevent some glitches on these signal to unexpected wake-up the system, a de-glitch circuit is embedded in V94XX. The following diagram shows an example of how this de-glitch circuit works. The de-glitch time will increase accordingly when the RTCCLK pre-scaler is set to a non-zero value. For example, when RTCCLK pre-scaler is set to 1/4, the de-glitch time will be increased to122*4=488μs. The de-glitch time only affects the wake-up signal under sleep and deep-sleep mode.

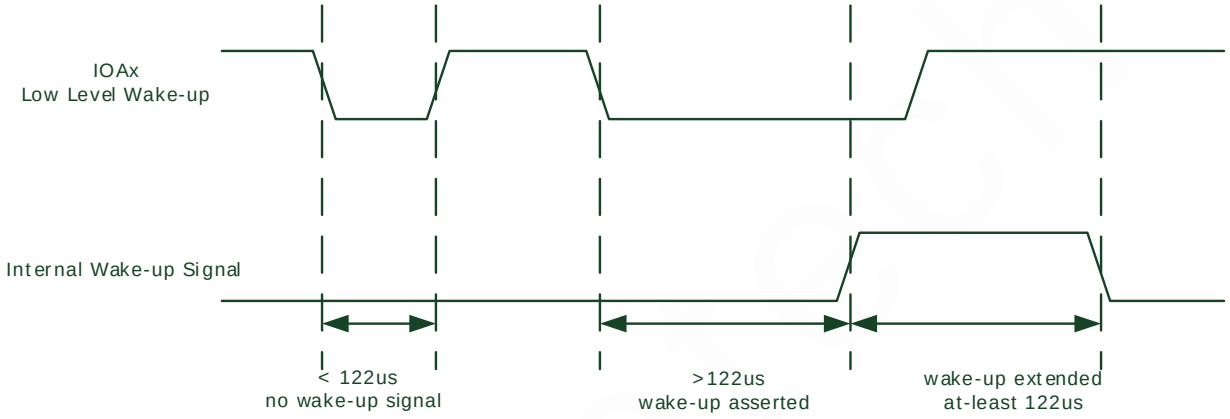

Figure 6-4 External Wake-up Example

6.8.2. Deep-sleep Entry Procedure

The following figure shows an example of deep-sleep mode entry procedure.

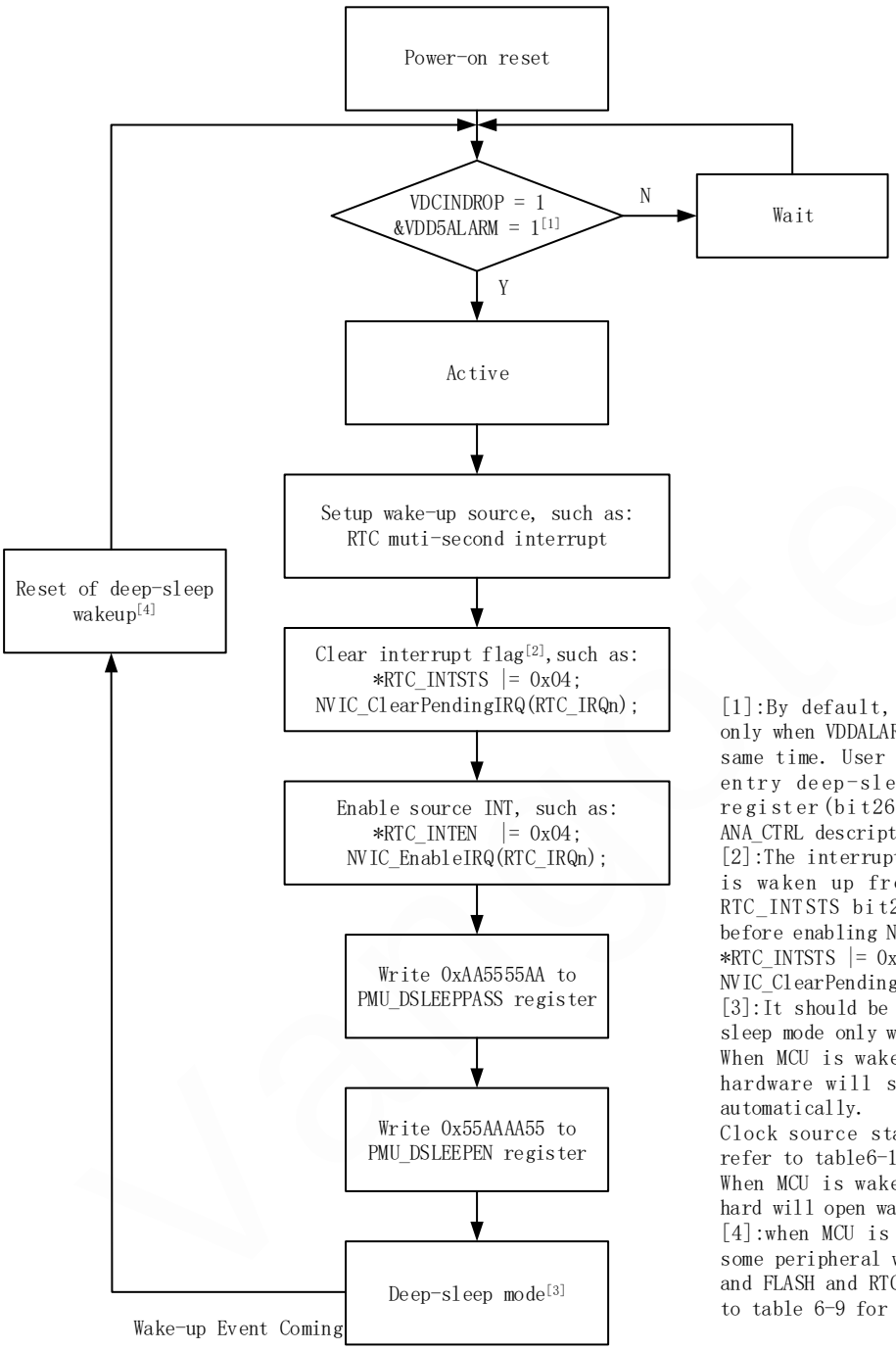

[1]:By default, MCU can entry deep-sleep mode only when VDDALARM and VDCINROP must be 1 at the same time. User can change the condition of MCU entry deep-sleep mode by setting ANA_CTRL register(bit26 and bit6). Please refer to ANA_CTRL description for details.
[2]:The interrupt flag will be set to 1 when MCU is waken up from deep-sleep mode, such as: RTC_INTSTS bit2. User should clear the flag before enabling NVIC interrupt again, such as:
*RTC_INTSTS |= 0x04;
NVIC_ClearPendingIRQ(RTC_IRQn);
[3]:It should be noted that MCU could enter deep-sleep mode only when MODE=1.
When MCU is waken up from deep sleep mode, the hardware will switch the system clock to RCH automatically.
Clock source state in different modes, please refer to table6-10 for details.
When MCU is waken up from deep-sleep mode, the hard will open watch dog automatically.
[4]:when MCU is waken up from deep-sleep mode, some peripheral will not be reset including SRAM and FLASH and RTC and WDT and so on, please refer to table 6-9 for details.

Figure 6-5 Deep-sleep Mode Entry Flow

6.8.3. Sleep Entry Procedure

The following figure shows an example of sleep mode entry procedure.

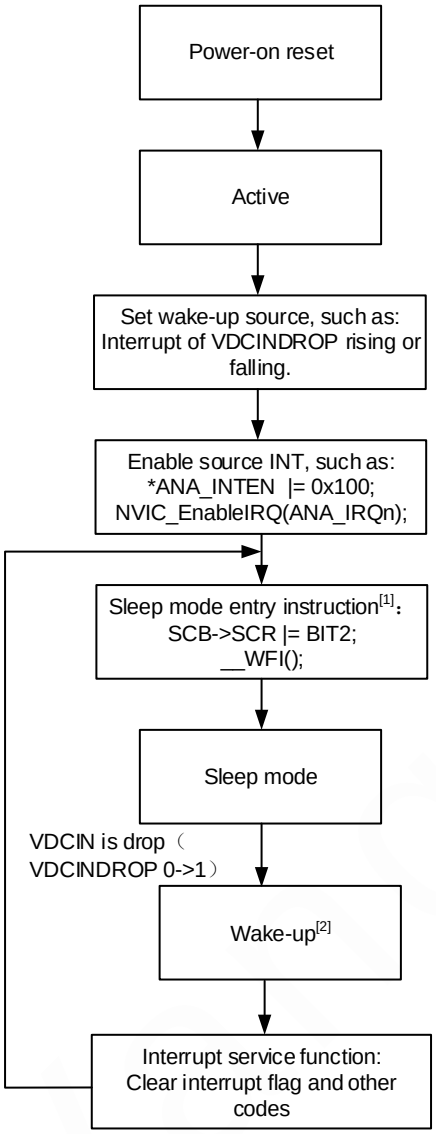

[1]:It should be noted that MCU could enter sleep mode only when MODE=1. If MCU executes instruction for entry sleep mode when MODE=0, MCU will entry IDLE mode.
[2]:When MCU is waken up from deep-sleep mode, some peripheral will be reset including UART , SPI , I2C and so on, but LCD , GPIO , ANA and so on will not be reset, please refer to table 6-9 for details.
When MCU is waken up from sleep mode, hardware will switch the system clock to the state of entry sleep mode. For example, the system clock is PLLL before entering sleep mode, the hardware will switch the system clock to PLLL when waking up from sleep mode.
The sate of clock source in different modes , please refer to table 6-10 for details.
When MCU is waken up from deep-sleep mode, the hard will open watch dog automatically.
Note: (1)If user enables RTC automatic temperature compensation, user should not select RCH as system clock before entering sleep mode. If user does not enable RTC automatic temperature compensation, user can select RCH as system clock before entering sleep mode. System clock source is controlled by CLKSEL(MISC2_CTRL bit2:0).
(2)User should not select RTCCLK as system clock before entering sleep mode. System clock source is controlled by CLKSEL(MISC2_CTRL bit2:0).

Figure 6-6 Sleep Mode Entry Flow

6.8.4. IDLE Entry Procedure

The following figure shows an example of idle mode entry procedure.

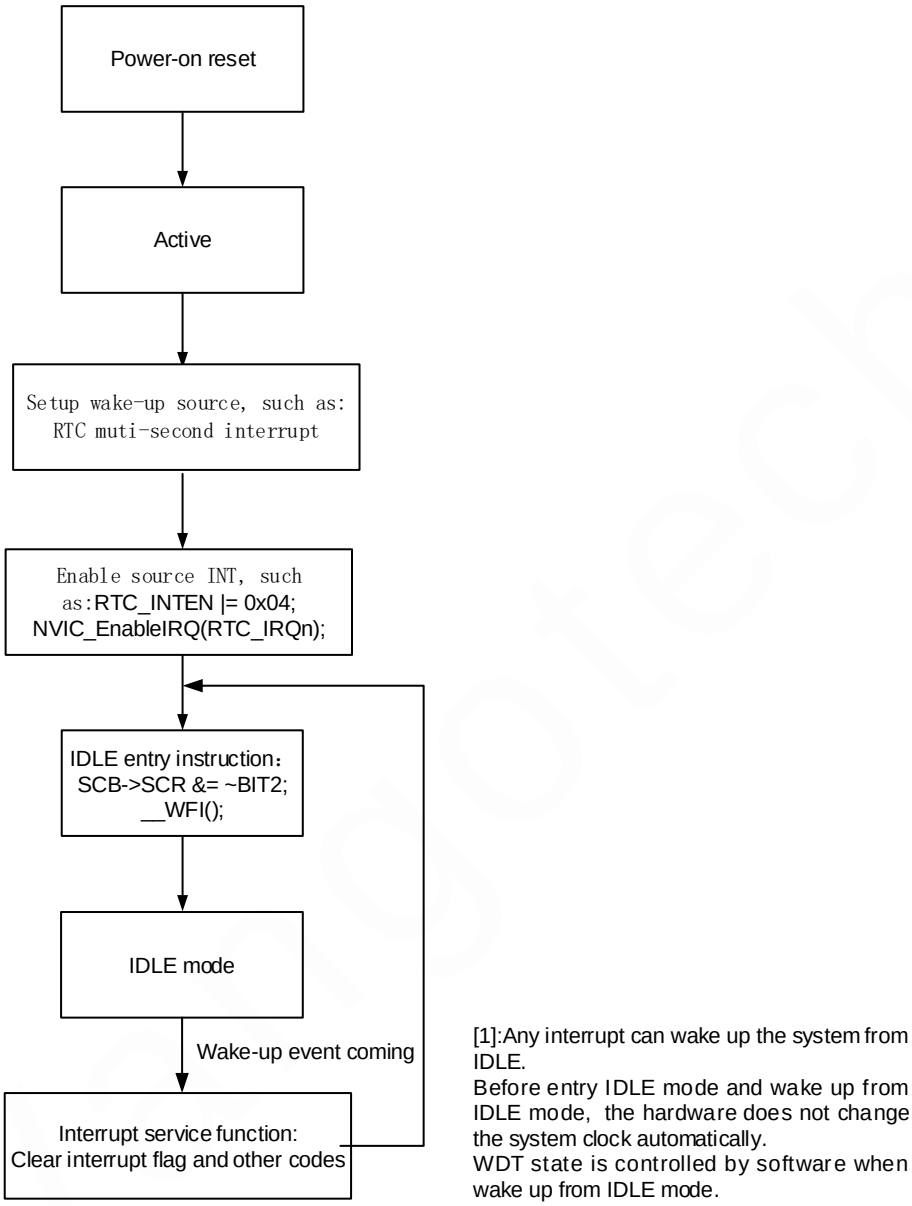

Figure 6-7 IDLE Mode Entry Flow

7.Clock Controller

7.1. Introduction

The settings in clock controller will be reset after wake-up from deep-sleep mode or system reset, programmer should restore the setting manually after wake-up from deep-sleep mode.

In the V94XX, there are four clock sources:

- The 32K RC oscillator circuit, to generate a 32.768K RC clock (32K RC). This circuit is running always. 32k RC can trimming from RCLTRIM [4:0] (ANA_REGB).
- The 32K crystal oscillator circuit, to generate a 32.768K XTAL clock (32K XTAL). This circuit is monitored by the 32K XTAL monitoring circuit that is sourced by 32K RC clock. When this oscillator circuit stops running, 32K RC clock will replace 32K XTAL, and the monitoring circuit will stimulate the crystal oscillator circuit until it runs again.
- The 6M RC oscillator circuit, to generate a 6.5536M RC clock (6M RC). This circuit can stop running by user register control. This circuit starts running from chip reset.
- The 6M XTAL oscillator circuit, to generate a 6.5536M XTAL clock (6M XTAL). This circuit can stop running by user register control.

Clock Source	Exit RTC only mode	Wake up from different modes		
		Deep sleep	Sleep	IDLE
6.5536M RC	ON	ON	Controlled by RCHPD	
6.5536M XTAL	OFF	OFF	Controlled by XOHPDN	
PLLH	OFF	OFF	Controlled by PLLHPDN	
PLLL	OFF	OFF	Controlled by PLLLPDN	
32K RC	ON	ON	ON	
32K XTAL	ON	ON	ON	

In the V94XX, there are three clock domains:

- HCLK is generated by one of the 6.5536M XTAL\6.5536M RC\32.768K XTAL\32.768K RC or multiply of them. HCLK provides clock pulses for the CPU\FLASH\SRAM\DMA\GPIO\LCD\CRYPT.
- PCLK is divided from HCLK. PCLK provides clock pulses for the slow peripheral.
- RTCCLK provides clock pulses for the RTC\ WDT\ UART32K\LCD.

For different mode, the enable or disable of clock generated module will be controlled by hardware or software, the following tables shows the detail of clock status under each mode.

Table 7-1 Clock Source Enable or Disable in Different Modes

Clock Source	Power modes				
	RTC only	Deep sleep	Sleep	IDLE	Active

6.5536M RC	OFF	OFF	OFF	Controlled by RCHPD
6.5536M XTAL	OFF	OFF	OFF	Controlled by XOHPDN
PLLH	OFF	OFF	OFF	Controlled by PLLHPDN
PLLL	OFF	OFF	OFF	Controlled by PLLLPDN
32K RC	ON	ON	ON	ON
32K XTAL	ON	ON	ON	ON

7.2. Block Diagram

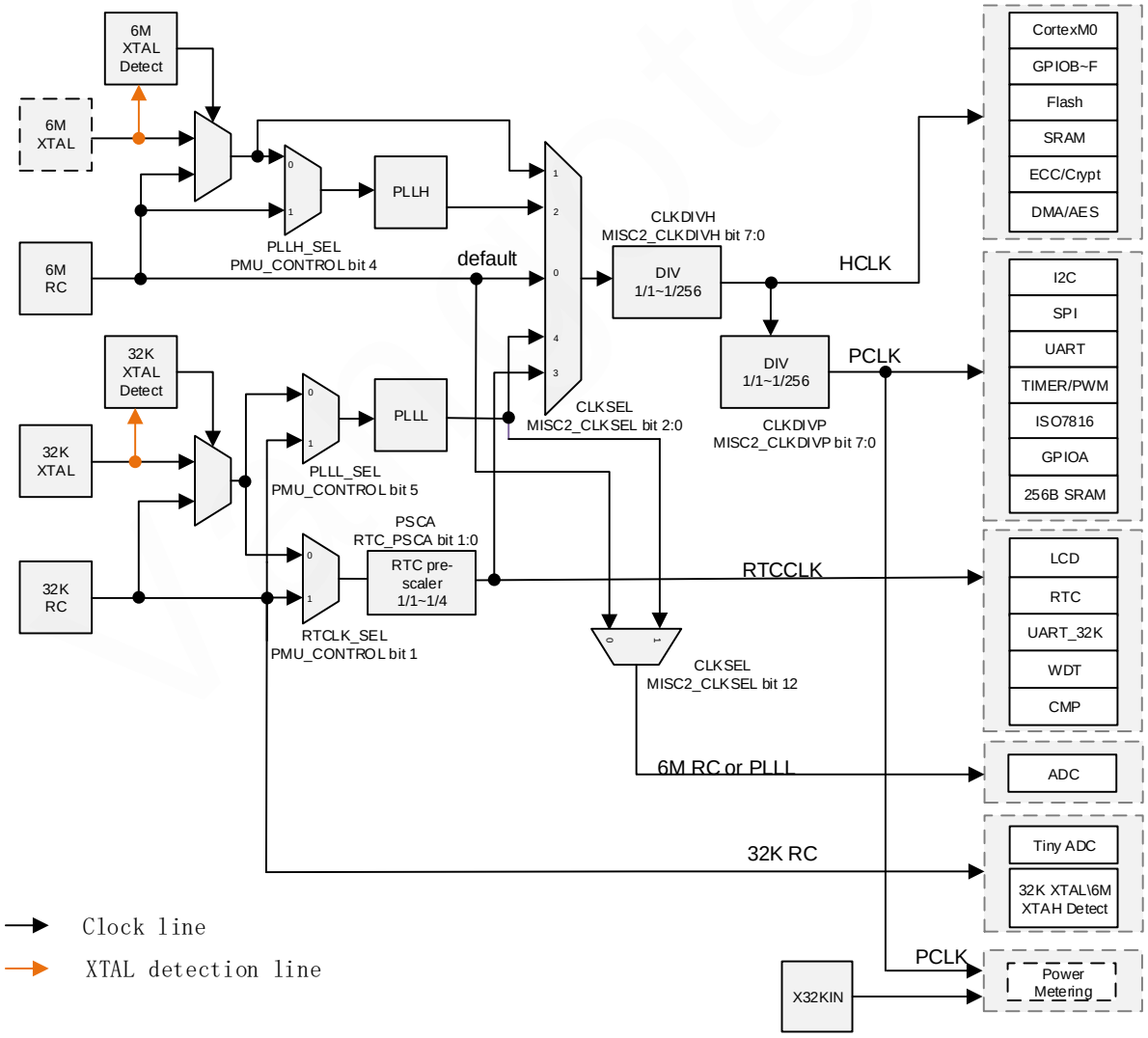

Figure 7-1 V94XX Clock Block Diagram

7.3. Register Location

Table 7-2 Register Location of ANA Controller for CLOCK (ANA Base: 0x40014200)

Name	Type	Address	Description	Default
ANA_REG2	R/W	0x0008	Analog control register 2	0x00
ANA_REG3	R/W	0x000C	Analog control register 3	0x00
ANA_REG9	R/W	0x0024	Analog control register 9	0x00
ANA_REGB	R/W	0x002C	Analog control register 11	From FLASH
ANA_REGC	R/W	0x0030	Analog control register 12	From FLASH
ANA_CMPOUT	R	0x0054	Comparator result register	0x0030

Table 7-3 Register Location of the PMU Controller (PMU Base: 0x40014000)

Name	Type	Address	Description	Default
PMU_CONTROL	R/W	0x0008	PMU control register	0x0000
PMU_STS	R/C	0x000C	PMU Status register	0x0000074

Table 7-4 Register Location of MISC2 Controller (MISC2 Base: 0x40013E00)

Name	Type	Address	Description	Default
MISC2_CLKSEL	R/W	0x0004	Clock selection register	0x0
MISC2_CLKDIVH	R/W	0x0008	AHB clock divider control register	0x00
MISC2_CLKDIVP	R/W	0x000C	APB clock divider control register	0x01
MISC2_HCLKEN	R/W	0x0010	AHB clock enable control register	0x1FF
MISC2_PCLKEN	R/W	0x0014	APB clock enable control register	0xFFFFFFFF

7.4. Feature

--Clock control of each sub-module

--Clock divider of AHBCLK and APBCLK.

7.5. Register Definition

7.5.1. ANA_REG2 Register

Table 7-5 Description of ANA_REG2

Bit	Name	Function	Notes
7	XOLPD	32K crystal pad (XOL) power down control.	0: XOL power on. 1: XOL power down.

7.5.2. ANA_REG3 Register

Table 7-6 Description of ANA_REG3

Bit	Name	Function	Notes
3	BGPPD*	BGP power down control signal.	0: Power-up BGP. 1: Power-down BGP.
4	RCHPD	RCH (6.5536M RC) power down control signal.	0: Power-up RCH. 1: Power-down RCH.
5	PLLLPDN	PLLL (32768Hz input PLL) power up control signal.	0: Power-down PLLL. 1: Power-up PLLL.
6	PLLHPDN	PLLH (6.5536MHz input PLL) power up control signal.	0: Power-down PLLH. 1: Power-up PLLH.
7	XOHPDN	6.5536M crystal power up control signal.	0: Power-down XOH. 1: Power-up XOH.
Note*: RCH and PLL and ADC are related to BGP, must power-up BGP before power-up RCH or PLL or ADC. User can power down BGP by set BGPPD to 1 when BGP was not used in program. User could not power down BGP by set BGPPD to 1 when BGP was used in program, because the system has a protection function to ensure reliability. User can power down BGP in sleep mode and deep-sleep mode whether BGP is used or not.			

7.5.3. ANA_REG4 Register

Table 7-7 Description of ANA_REG2

Bit	Name	Function	Notes
7:0		Reserved.	Default: 0x00, must be set to

			0x01 by user.

7.5.4. ANA_REG9 Register

Table 7-8 Description of ANA_REG9

Bit	Name	Function	Notes
2:0	PLLLSEL[2:0]	Frequency selection of PLLL.	000: 26.2144MHz 001: 13.1072MHz 010: 6.5536MHz 011: 3.2768MHz 100: 1.6384MHz 101: 0.8192MHz 110: 0.4096MHz 111: 0.2048MHz
6:3	PLLHSEL[3:0]	Frequency selection of PLLH. The PLLH's frequency is the multiply of external XOH or internal RCH.	1000~1011: Reserved. 1100: 2 x Input clock 1101: 2.5 x Input clock 1110: 3 x Input clock 1111: 3.5 x Input clock 0000: 4 x Input clock 0001: 4.5 x Input clock 0010: 5 x Input clock 0011: 5.5 x Input clock 0100: 6 x Input clock 0101: 6.5 x Input clock 0110: 7 x Input clock 0111: 7.5 x Input clock

7.5.5. ANA_REGB Register

Table 7-9 Description of ANA_REGB

Bit	Name	Function	Notes
4:0	RCLTRIM[4:0]	Trimming of 32kHz RC.	00000~01111: increased by 4%

			for each step; 10000~11111: decreased by 4% for each step;
Note: Users must not modify the configuration of ANA_REGx(x=B~E), it can be loaded from FLASH automatically.			

7.5.6. ANA_REGC Register

Table 7-10 Description of ANA_REGC

Bit	Name	Function	Notes
5:0	RCHTRIM[5:0]	Trimming of 6.5536MHz RC	000000~011111: increased by 1.25% for each step; 100000~111111: decreased by 1.25% for each step;
Note: Users must not modify the configuration of ANA_REGx(x=B~E), it can be loaded from FLASH automatically.			

7.5.7. ANA_CMPOUT Register

Table 7-11 Description of ANA_CMPOUT Register

Bit	Name	Type	Description	Default
1	LOCKL	R	PLLL lock status. It takes about 1ms until PLLL locked. 0: PLLL is not lock. 1: PLLL is lock.	0x0
0	LOCKH	R	PLLH lock status. It takes about 15μs until PLLH locked. 0: PLLH is not lock. 1: PLLH is lock.	0x0

7.5.8. PMU_CONTROL Register

Table 7-12 Description of PMU_CONTROL Register

Bit	Name	Type	Description	Default
5	PLLL_SEL	R/W	Low speed PLL input clock selection.	0x0

			0: 32KXTAL 1: 32K RC	
4	PLLH_SEL	R/W	High speed PLL input clock selection. 0: 6.5MHz RC 1: 6.5536MHz XTAL	0x0
3	INT_6M_EN	R/W	6.5536M XTAL absent interrupt enable register. This bit is used to control the interrupt signal output to CPU. When this bit is set to 1, if 6.5536M crystal is removed or broken, an interrupt will be issued to CPU.	0x0
2	INT_32K_EN	R/W	32K XTAL absent interrupt enable register. This bit is used to control the interrupt signal output to CPU. When this bit is set to 1, if 32K crystal is removed or broken, an interrupt will be issued to CPU. And if this event is happened during sleep, CPU will be waked up.	0x0
1	RTCCLK_SEL	R/W	RTC Clock selection. 0: 32K XTAL 1: 32K RC	0x0

7.5.9. PMU_STS Register

Table 7-13 Description of PMU_STS Register

Bit	Name	Type	Description	Default
3	EXIST_6M	R	6.5536M XTAL exist status register. This bit represents 6.5536M XTAL is existed or absent. After 6.5536MHz XTAL (BIT7 of ANA_REG3 is configured as 1) is turned on, the state bit will refresh, otherwise it will remain in its previous state. 0: 6.5536M crystal is absent. 1: 6.5536M crystal is existed.	0x0
2	EXIST_32K	R	32K XTAL exist status register. This bit represents 32K XTAL is existed or absent. 0: 32K crystal is absent. 1: 32K crystal is existed.	0x1
1	INT_6M	R/C	This bit represents the 6.5536M crystal absent interrupt status. When this bit is set to 1, it means the 6.5536M crystal is removed or broken.	0x0

			When the EXIST_6M state goes from 1 to 0, the state position is 1. Write 1 to this bit can clear this flag to 0.	
0	INT_32K	R/C	This bit represents the 32K crystal absent interrupt status. When this bit is set to 1, it means the 32K crystal is removed or broken. When the EXIST_32K state goes from 1 to 0, the state position is 1. Write 1 to this bit can clear this flag to 0.	0x0

7.5.10. MISC2_CLKSEL Register

Table 7-14 Description of MISC2_CLKSEL Register

Bit	Name	Type	Description	Default
31:3			Reserved.	0
2:0	CLKSEL	R/W	This register is used to control AHB clock source. 0: RCH (6.5MHz RC) 1: XOH (6.5536MHz XTAH). 2: PLLH. 3: RTCCLK (controlled by RTCCLK_SEL in PMU_CONTROL register). 4: PLLL. Before clock select to one of the clock source, programmer should enable the corresponded module first by setting PMU_CONTROL register.	0x0

7.5.11. MISC2_CLKDIVH Register

Table 7-15 Description of MISC2_CLKDIVH Register

Bit	Name	Type	Description	Default
31:8			Reserved.	0
7:0	CLKDIVH	R/W	This register is used to control AHB clock divider. 0: Clock source divide by 1 1: Clock source divide by 2. 2: Clock source divide by 3.	0x00

			.... 255: Clock source divide by 256.	

7.5.12. MISC2_CLKDIVP Register

Table 7-16 Description of MISC2_CLKDIVP Register

Bit	Name	Type	Description	Default
31:8			Reserved.	0
7:0	CLKDIVP	R/W	This register is used to control APB clock divider. 0: AHB clock divide by 1. 1: AHB clock divide by 2. 2: AHB clock divide by 3. .... 255: AHB clock divide by 256.	0x01

7.5.13. MISC2_HCLKEN Register

Table 7-17 Description of MISC2_HCLKEN Register

Bit	Name	Type	Description	Default
31:9			Reserved.	0
8:0	HCLKEN	R/W	This register is used to control clock enable of each AHB module. The corresponded module can be turned-off only when its function is not been used. Refer to Table 7-18 for detail about each module. 0: Disable. 1: Enable.	0x1FF

Table 7-18 HCLK clock enable of each module

Bit	Module	Note
0	--	
1	Arbiter & Bus Matrix	Shouldn't off when CPU or DMA is active.
2	FLASH Controller	Shouldn't off.
3	SRAM Controller	Shouldn't off.
4	DMA Controller	

5	GPIO Controller	
6	LCD Controller	
7	--	
8	CRYPT Controller	

7.5.14. MISC2_PCLKEN Register

Table 7-19 Description of MISC2_PCLKEN Register

Bit	Name	Type	Description	Default
31:0	PCLKEN	R/W	This register is used to control clock enable of each APB module. The corresponded module can be turned-off only when its function is not been used. Refer to Table 7-20 for detail about each module. 0: Disable. 1: Enable.	0xFFFFFFFF

Table 7-20 PCLK Clock Enable of Each Module

Bit	Module	Note
0	AHB2APB Bridge	Shouldn't off.
1	DMA Controller	
2	I2C	
3	SPI1	
4	UART0	
5	UART1	
6	UART2	
7	UART3	
8	UART4	
9	UART5	
10	ISO78160	
11	ISO78161	
12	Timer	
13	MISC	
14	MISC2	

15	PMU	
16	RTC	
17	ANA	
18	U32K 0	
19	U32K 1	
20	Reserved.	
21	SPI2.	
31:22	Reserved.	

Vango Tech

8.Analog Controller

8.1. Introduction

The Analog controller is used to control the analog function of V94XX. All the analog related control like ADC, comparator and other analog flag detection are controlled by this module. The analog controller is placed in always-on domain, so all the analog setting will be kept under deep-sleep mode.

8.2. Feature

-- Interrupt/wake-up signal generated for analog detect flag.

-- Comparator interrupt generation.

-- Comparator counter.

-- ADC manual and auto sample mode.

-- ADC interrupt generation.

8.3. Block Diagram

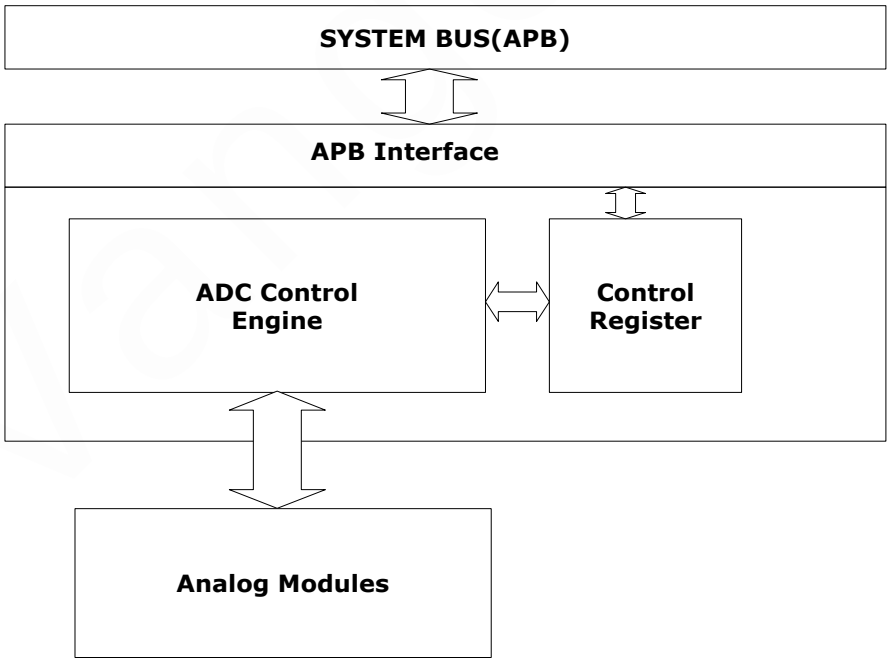

Figure 8-1 Functional Block Diagram of Analog Controller

8.4. Register Location

Table 8-1 Register Location of ANA Controller (ANA Base: 0x40014200)

Name	Type	Address	Description	Default
ANA_REG0	R/W	0x0000	Analog register 0	0x00
ANA_REG1	R/W	0x0004	Analog register 1	0x00
ANA_REG2	R/W	0x0008	Analog register 2	0x00
ANA_REG3	R/W	0x000C	Analog register 3	0x00
ANA_REG4	R/W	0x0010	Analog register 4	0x00
ANA_REG5	R/W	0x0014	Analog register 5	0x00
ANA_REG6	R/W	0x0018	Analog register 6	0x00
ANA_REG7	R/W	0x001C	Analog register 7	0x00
ANA_REG8	R/W	0x0020	Analog register 8	0x00
ANA_REG9	R/W	0x0024	Analog register 9	0x00
ANA_REGA	R/W	0x0028	Analog register 10	0x00
ANA_REGB	R/W	0x002C	Analog register 11	From FLASH
ANA_REGC	R/W	0x0030	Analog register 12	From FLASH
ANA_REGD	R/W	0x0034	Analog register 13	From FLASH
ANA_REGE	R/W	0x0038	Analog register 14	From FLASH
ANA_REGF	R/W	0x003C	Analog register 15	0x00
ANA_CTRL	R/W	0x0050	Analog control register	0x0000000
ANA_CMPOUT	R	0x0054	Comparator result register	0x0030
ANA_INTSTS	R/C	0x0060	Analog interrupt status register	0x0000
ANA_INTEN	R/W	0x0064	Analog interrupt enable register	0x0000
ANA_ADCCTRL	R/W	0x0068	ADC control register	0x00000000
ANA_ADCDATA0	R	0x0070	ADC channel 0 data register	--
ANA_ADCDATA1	R	0x0074	ADC channel 1 data register	--
ANA_ADCDATA2	R	0x0078	ADC channel 2 data register	--
ANA_ADCDATA3	R	0x007C	ADC channel 3 data register	--
ANA_ADCDATA4	R	0x0080	ADC channel 4 data register	--
ANA_ADCDATA5	R	0x0084	ADC channel 5 data register	--
ANA_ADCDATA6	R	0x0088	ADC channel 6 data register	--
ANA_ADCDATA7	R	0x008C	ADC channel 7 data register	--
ANA_ADCDATA8	R	0x0090	ADC channel 8 data register	--

ANA_ADCDATA9	R	0x0094	ADC channel 9 data register	--
ANA_ADCDATAA	R	0x0098	ADC channel 10 data register	--
ANA_ADCDATAB	R	0x009C	ADC channel 11 data register	--
ANA_CMPCNT1	R/C	0x00B0	Comparator 1 counter	0x00000000
ANA_CMPCNT2	R/C	0x00B4	Comparator 2 counter	0x00000000
ANA_MISC	R/W	0x00B8	Analog misc. control register	0x00

8.5. Register Definition

8.5.1. ANA_REGx Register

Table 8-2 Description of ANA_REGx

	Bit								
	7	**6**	**5**	**4**	**3**	**2**	**1**	**0**	**Address**
ANA_REG0	-	-	-		-		-		0x0000
ANA_REG1	-	-	GDE4	RESDIV	-				0x0004
ANA_REG2	-	-	REFSEL_CMP2	REFSEL_CMP1	CMP2_SEL[1:0]		CMP1_SEL[1:0]		0x0008
ANA_REG3	XOHPDN	PLLHPDN	PLLLPDN	RCHPD	BGPPD	CMP2PDN	CMP1PDN	ADCPDN	0x000C
ANA_REG4	-		-		-	-	-		0x0010
ANA_REG5	-	PD_AVCCDET	-	-	IT_CMP2[1:0]		IT_CMP1[1:0]		0x0014
ANA_REG6	BATRTCDISC	-	-	VLCD[3:0]				LCD_BMOD	0x0018
ANA_REG7	-	-	-	-	-	-	-	-	0x001C
ANA_REG8	PD_AVCCLDO	VDDPVDSEL[2:0]			-		-		0x0020
ANA_REG9	PD_VDDDET	PLLHSEL[3:0]				PLLLSEL[2:0]			0x0024
ANA_REGA	PD_VDCINDET	-	-	-	-	-	-	-	0x0028
ANA_REGB		-	-	RCLTRIM[4:0]					0x002C
ANA_REGC	-	-	RCHTRIM[5:0]						0x0030
ANA_REGD	-								0x0034
ANA_REGE	-								0x0038
ANA_REGF	ADTREF3_SEL	ADTREF2_SEL	ADTREF1_SEL	SEL_ADT	PDN_ADT	AVCCO_EN	-		0x003C

8.5.2. ANA_REG1 Register

Table 8-3 Description of each bit in ANA_REG1

Bit	Name	Function	Notes
3:0	-	Reserved.	0
4	RESDIV	Enable resistor division for M ADC's input signal	0: Disable 1: Enable 1/4 resistor division
5	GDE4	Enable cap division for M ADC's input signal	0: Disable 1: Enable 1/4 cap division
7:6	-	Reserved.	0

8.5.3. ANA_REG2 Register

Table 8-4 Description of each bit in ANA_REG2

Bit	Name	Function	Notes
1:0	CMP1_SEL[1:0]	Signal source selection of comparator A	00: CMP1_P to REF 01: CMP1_N to REF 1*: CMP1_P to CMP1_N
3:2	CMP2_SEL[1:0]	Signal source selection of comparator B	00: CMP2_P to REF 01: CMP2_N to REF 1*: CMP2_P to CMP2_N
4	REFSEL_CMP1	REF selection of CMP1	0: VREF 1: BGPREF.
5	REFSEL_CMP2	REF selection of CMP2	0: VREF 1: BGPREF.
7: 6	-	Reserved.	0

8.5.4. ANA_REG3 Register

Table 8-5 Description of each bit in ANA_REG3

Bit	Name	Function	Notes
0	ADCPDN	ADC power up control signal. ADC automatic conversion should	0: Power-down ADC 1: Power-up ADC

		be disabled before ADC is powered down.	
1	CMP1PDN	CMP1 power up control signal	0: Power-down CMP1 1: Power-up CMP1
2	CMP2PDN	CMP2 power up control signal	0: Power-down CMP2 1: Power-up CMP2
3	BGPPD*	BGP power down control signal.	0: Power-up BGP 1: Power-down BGP
4	RCHPD	RCH (6.5536M RC) power down control signal	0: Power-up RCH 1: Power-down RCH
5	PLLLPDN	PLLL (32768Hz input PLL) power up control signal.	0: Power-down PLLL 1: Power-up PLLL
6	PLLHPDN	PLLH (6.5536MHz input PLL) power up control signal.	0: Power-down PLLH 1: Power-up PLLH
7	XOHPDN	6.5536M crystal power up control signal.	0: Power-down XOH 1: Power-up XOH
Note*: RCH and PLL and ADC are related to BGP, must power-up BGP before power-up RCH or PLL or ADC. User can power down BGP by set BGPPD to 1 when BGP was not used in program. User could not power down BGP by set BGPPD to 1 when BGP was used in program, because the system has a protection function to ensure reliability. User can power down BGP in sleep mode and deep-sleep mode whether BGP is used or not.			

8.5.5. ANA_REG4 Register

Table 8-6 Description of each bit in ANA_REG4

Bit	Name	Function	Notes
7:0		Reserved.	Default: 0x00, must be set to 0x01 by user.

8.5.6. ANA_REG5 Register

Table 8-7 Description of each bit in ANA_REG5

Bit	Name	Function	Notes
1:0	IT_CMP1[1:0]	Bias current selection of CMP1	00: 20nA; 01: 100nA;

			1*: 500nA;
3:2	IT_CMP2[1:0]	Bias current selection of CMP2	00: 20nA; 01: 100nA; 1*: 500nA;
5:4	-	Reserved.	0
6	PD_AVCCDET	Power down AVCC low voltage detector.	0: Power-up AVCC LV detector. 1: Power-down detector.
7	-	Reserved.	0

8.5.7. ANA_REG6 Register

Table 8-8 Description of each bit in ANA_REG6

Bit	Name	Function	Notes
0	LCD_BMODE	LCD BIAS mode selection	0: 1/3 bias; 1: 1/4 bias.
4:1	VLCD[3:0]	LCD driving voltage	VLCD=0: default VLCD=0~5: adjust range =+60mV*VLCD VLCD=6~15: adjust range =-60mV*(VLCD-5)
6:5		Reserved.	0
7	BATRTCDISC	Discharge the BATRTC battery. Discharge resistance is 1.7k, and the discharge current is Vbatrtc / 1.7k.	1: enable 1.7k resistor from BATRTC to GND

8.5.8. ANA_REG7 Register

Table 8-9 Description of each bit in ANA_REG7

Bit	Name	Function	Notes
7:0	-	Reserved.	Default: 0x00, must be set to 0x00.

8.5.9. ANA_REG8 Register

Table 8-10 Description of each bit in ANA_REG8

Bit	Name	Function	Notes
3: 0	-	Reserved.	0
6:4	VDDPVDSEL[2:0]	Voltage selection of VDD power detector, the setting in this register will affect the status of VDDALARM.	000: 4.5V 001: 4.2V 010: 3.9V 011: 3.6V 100: 3.2V 101: 2.9V 110: 2.6V 111: 2.3V
7	PD_AVCCLDO	AVCCLDO control register, and control power-down or power-up of LDO.	0: Power up LDO, Voltage of AVCC pin is 3.3V. 1: Power down LDO, AVCC connect to VDD through a switch, and the switch resistor refer to table 1-4. AVCCLDO can be power down only when power supply less than 3.6V.

8.5.10. ANA_REG9 Register

Table 8-11 Description of each bit in ANA_REG9

Bit	Name	Function	Notes
2:0	PLLLSEL[2:0]	Frequency selection of PLLL	000: 26.2144MHz 001: 13.1072MHz 010: 6.5536MHz 011: 3.2768MHz 100: 1.6384MHz 101: 0.8192MHz 110: 0.4096MHz

			111: 0.2048MHz
6:3	PLLHSEL[3:0]	Frequency selection of PLLH. The PLLH's frequency is the multiply of external XOH or internal RCH.	1000~1011: Reserved. 1100: 2 x Input clock 1101: 2.5 x Input clock 1110: 3 x Input clock 1111: 3.5 x Input clock 0000: 4 x Input clock 0001: 4.5 x Input clock 0010: 5 x Input clock 0011: 5.5 x Input clock 0100: 6 x Input clock 0101: 6.5 x Input clock 0110: 7 x Input clock 0111: 7.5 x Input clock
7	PD_VDDDET	Power down VDD input VDDALARM detector. This module powered by VDD.	0: Power up. 1: Power down.

8.5.11. ANA_REGA Register

Table 8-12 Description of each bit in ANA_REGA

Bit	Name	Function	Notes
6:0	-	Reserved.	Default: 0x00, must be set to 0x0A.
7	PD_VDCINDET	PD VDCIN detector	0: Power up 1: Power down

8.5.12. ANA_REGB Register

Table 8-13 Description of each bit in ANA_REGB

Bit	Name	Function	Notes
4:0	RCLTRIM[4:0]	Trimming of 32kHz RC.	00000~01111: increased by 4% for each step;

			10000~11111: decreased by 4% for each step;
7:5	VREFTRIM[2:0]	Trimming of VREF, which will affect DVCC/AVCC's output by same ratio	011: +9%; 010: +6%; 001: +3%; 000: 0%; 100: -3%; 101: -6%; 110: -9%; 111: -12%;
Note: Users must not modify the configuration of ANA_REGx(x=B~E), it can be loaded from FLASH automatically.			

8.5.13. ANA_REGC Register

Table 8-14 Description of each bit in ANA_REGC

Bit	Name	Function	Notes
5:0	RCHTRIM[5:0]	Trimming of 6.5536MHz RC	000000~011111:increased by 1.25% for each step; 100000~111111:decreased by 1.25% for each step;
7:6		Reserved.	0
Note: Users must not modify the configuration of ANA_REGx(x=B~E), it can be loaded from FLASH automatically.			

8.5.14. ANA_REGF Register

Table 8-15 Description of each bit in ANA_REGF

Bit	Name	Function	Notes
1:0		Reserved.	0
2	AVCCO_EN	Enable AVCC_OUT pin to output AVCC level.	0: High resistance. 1: AVCC_OUT pin output AVCC level, and it can be used to drive small power module.
3	PDN_ADT	Power up Tiny ADC	0: Power down.

			1: Power up
4	SEL_ADT	Signal selection for ADT	0: Connect to IOE6 1: Connect to IOE7
5	ADTREF1_SEL	REF1 of ADT selection	0: 0.9V 1: 0.7V
6	ADTREF2_SEL	REF2 of ADT selection	0: 1.8V 1: 1.6V
7	ADTREF3_SEL	REF3 of ADT selection	0: 2.7V 1: 2.5V

8.5.15. ANA_CTRL Register

Table 8-16 Description of ANA_CTRL Register

Bit	Name	Type	Description	Default
31: 27	-	R/W	Reserved.	0
26	PDNS2	R/W	This register is used to set the deep sleep behavior when VDDALARM is 0 (Still need to consider the PDNS setting). 0: Can't enter deep-sleep mode when VDDALARM is 0. When VDDALARM is 1, The system can enter deep-sleep mode. And system will wake-up from deep-sleep mode automatically as long as VDDALARM became 0. 1: Can enter deep-sleep mode no-matter which state VDDALARM is.	0x0
25:24	VDCINDEB	R/W	VDCIN de-bounce control register. 0: No de-bounce. 1: 2 RTCCLK de-bounce. 2: 3 RTCCLK de-bounce. 3: 4 RTCCLK de-bounce. When de-bounce is enabled, the input signal is valid only when the signal isn't change in multi-cycles of RTCCLK clock. And, the response time of the wake-up and interrupt will be delayed until the signal is valid. This circuit can work under all mode including sleep and deep-sleep mode.	0x0
23:22	CMP2DEB	R/W	Comparator 2 de-bounce control register.	0x0

			0: No de-bounce. 1: 2 RTCCLK de-bounce. 2: 3 RTCCLK de-bounce. 3: 4 RTCCLK de-bounce. When de-bounce is enabled, the input signal is valid only when the signal isn't change in multi-cycles of RTCCLK clock. And, the response time of the wake-up and interrupt will be delayed until the signal is valid. This circuit can work under all mode including sleep and deep-sleep mode.	
21:20	CMP1DEB	R/W	Comparator 1 de-bounce control register. 0: No de-bounce. 1: 2 RTCCLK de-bounce. 2: 3 RTCCLK de-bounce. 3: 4 RTCCLK de-bounce. When de-bounce is enabled, the input signal is valid only when the signal isn't change in multi-cycles of RTCCLK clock. And, the response time of the wake-up and interrupt will be delayed until the signal is valid. This circuit can work under all mode including sleep and deep-sleep mode.	0x0
19:16			Reserved.	0
15:8	RCHTGT	R/W	RCH auto calibration target register. This register is used to store the target value of RCH. When the target frequency is 6.5536MHz, user should fill 6553600/32768 = 200 to this register.	0x0
7			Reserved.	0
6	PDNS	R/W	This register is used to set the deep sleep behavior when VDCINDROP is 0(Still need to consider the PDNS setting). 0: Can't enter deep-sleep mode when VDCINDROP is 0. When VDCINDROP is 1, The system can enter deep-sleep mode. And system will wake-up from deep-sleep mode automatically as long as VDCINDROP became 0. 1: Can enter deep-sleep mode no-matter which state VDCINDROP is.	0x0
5:4			Reserved.	0

3:2	COMP2_SEL	R/W	This register is used to control the interrupt and wake-up signal generation of COMP2. 0: Off. 1: Rising edge of COMP2. 2: Falling edge of COMP2. 3: Change of COMP2.	0x0
1:0	COMP1_SEL	R/W	This register is used to control the interrupt and wake-up signal generation of COMP1. 0: Off. 1: Rising edge of COMP1. 2: Falling edge of COMP1. 3: Change of COMP1.	0x0

8.5.16. ANA_CMPOUT Register

Table 8-17 Description of ANA_CMPOUT Register

Bit	Name	Type	Description	Default
31:16	-	-	Reserved.	0
15:14	TADCO	R	Tiny ADC output.	-
13:11	-	-	Reserved.	0
10	AVCCLV	R	AVCC low power status. And hysteresis voltage of AVCCLV is 20mV~30mV. 0: AVCC is higher than 2.5V. 1: AVCC is lower than 2.5V.	0x0
9	-	-	Reserved.	0
8	VDCINDROP	R	VDCIN drop status 0: VDCIN is not drop (VDCIN higher than threshold). 1: VDCIN is drop (i.e. VDCIN lower than threshold).	0x0
7	VDDALARM	R	This bit shows the output of VDDALARM. 0: Voltage of VDD is higher than voltage setting by VDDPVDSEL. 1: Voltage of VDD is lower than voltage setting	0x0

			by VDDPVDSEL.	
6:4	-	-	Reserved.	0
3	COMP2	R	This bit shows the output of comparator 2.	0x0
2	COMP1	R	This bit shows the output of comparator 1.	0x0
1	LOCKL	R	PLLL lock status. It takes about 1ms until PLLL locked. 0: PLLL is not lock. 1: PLLL is lock.	0x0
0	LOCKH	R	PLLH lock status. It takes about 15μs until PLLH locked. 0: PLLH is not lock. 1: PLLH is lock.	0x0

8.5.17. ANA_INSTS Register

Table 8-18 Description of ANA_INTSTS Register

Bit	Name	Type	Description	Default
31:14	-	-	Reserved.	0
13	INTSTS13	R/C	TADC change over-threshold interrupt. This interrupt will be set when the TADC is rising or falling and the change value compare to previous cycle is larger than the threshold setting in the TADCTH in ANA_MISC register, this interrupt flag will be set. Read 0: No TADC over threshold interrupt. Read 1: TADC over threshold is happened. Write 0: No effect. Write 1: clear this bit.	0x0

12	INTSTS12	R/C	ANA_REGx error flag. This interrupt is used to detect the error status of ANA_REGx, an automatically check0sum and parity check is applied to ANA_REGx, when external noise cause by ESD or other problem affect the setting of ANA_REGx, this interrupt will be asserted and programmer can use this flag to determine if it is necessary to recover the setting in the ANA_REGx. Read 0: No ANA_REGx error interrupt. Read 1: ANA_REGx error is happened. Write 0: No effect. Write 1: clear this bit.	0x0
11	INTSTS11	R/C	Interrupt flag of sleep mode entry under VDCINDROP is 0(i.e. VDCIN higher than threshold), this interrupt will be generated when VDCINDROP is 0 and the entry of sleep or deep-sleep modes are detected. Programmer can enable this interrupt to force CPU wake-up from sleep or deep-sleep mode when VDCINDROP is 0. Read 0: No Sleep mode entry interrupt. Read 1: Sleep mode entry interrupt is happened. Write 0: No effect. Write 1: clear this bit.	0x0
10	INTSTS10	R/C	Interrupt flag of AVCCLV (AVCC low power status), this interrupt will be generated when AVCCLV rising or falling. Read 0: No AVCCLV interrupt. Read 1: AVCCLV interrupt is happened. Write 0: No effect. Write 1: clear this bit.	0x0
9	-	-	Reserved.	0
8	INTSTS8	R/C	Interrupt flag of VDCINDROP (VDCIN status), this interrupt will be generated when VDCINDROP rising or falling. Read 0: No VDCINDROP interrupt. Read 1: VDCINDROP interrupt is happened. Write 0: No effect. Write 1: clear this bit.	0x0

7	INTSTS7	R/C	Interrupt flag of VDDALARM (VDD status), this interrupt will be generated when VDDALARM rising or falling. Read 0: No VDDALARM interrupt. Read 1: VDDALARM interrupt is happened. Write 0: No effect. Write 1: clear this bit.	0x0
6:4	-	-	Reserved.	0
3	INTSTS3	R/C	Interrupt flag of COMP2, the interrupt generate condition is controlled by COMP2_SEL. Read 0: No COMP2 interrupt. Read 1: COMP2 interrupt is happened. Write 0: No effect. Write 1: clear this bit.	0x0
2	INTSTS2	R/C	Interrupt flag of COMP1, the interrupt generate condition is controlled by COMP1_SEL. Read 0: No COMP1 interrupt. Read 1: COMP1 interrupt is happened. Write 0: No effect. Write 1: clear this bit.	0x0
1	INTSTS1	R/C	Interrupt flag of auto ADC conversion done. Read 0: Auto ADC conversion not complete. Read 1: Auto ADC conversion has done. Write 0: No effect. Write 1: clear this bit.	0x0
0	INTSTS0	R/C	Interrupt flag of manual ADC conversion done. Read 0: Manual ADC conversion not complete. Read 1: Manual ADC conversion has done. Write 0: No effect. Write 1: clear this bit.	0x0

8.5.18. ANA_INTEN Register

Table 8-19 Description of ANA_INTEN Register

Bit	Name	Type	Description	Default
31:14	-	-	Reserved.	0
13	INTEN13	R/W	Interrupt and wake-up enable control of the change in TADC output value is over or equal to threshold. 0: Disable TADC interrupt and wake-up. 1: Enable TADC interrupt and wake-up.	0x0
12	INTEN12	R/W	Interrupt and wake-up enable control of ANA_REGx error. 0: Disable ANA_REGx error interrupt and wake-up. 1: Enable ANA_REGx error interrupt and wake-up.	0x0
11	INTEN11	R/W	Interrupt and wake-up enable control of sleep mode entry, when VDCINDROP is 0(i.e. VDCIN higher than threshold). Programmer can enable this interrupt to force CPU wake-up from sleep or deep-sleep mode when VDCINDROP is 0 and the entry of sleep or deep-sleep modes are detected. 0: Disable Sleep mode entry interrupt and wake-up. 1: Enable Sleep mode entry interrupt and wake-up.	0x0
10	INTEN10	R/W	Interrupt and wake-up enable control of AVCCLV. 0: Disable AVCCLV interrupt and wake-up. 1: Enable AVCCLV interrupt and wake-up.	0x0
9	-	-	Reserved.	0
8	INTEN8	R/W	Interrupt and wake-up enable control of VDCINDROP. 0: Disable VDCINDROP interrupt and wake-up. 1: Enable VDCINDROP interrupt and wake-up.	0x0
7	INTEN7	R/W	Interrupt and wake-up enable control of VDDALARM. 0: Disable VDDALARM interrupt and wake-up. 1: Enable VDDALARM interrupt and wake-up.	0x0
6:4	-	-	Reserved.	0
3	INTEN3	R/W	Interrupt and wake-up enable control of COMP2. 0: Disable COMP2 interrupt and wake-up. 1: Enable COMP2 interrupt and wake-up.	0x0
2	INTEN2	R/W	Interrupt and wake-up enable control of COMP1. 0: Disable COMP1 interrupt and wake-up.	0x0

			1: Enable COMP1 interrupt and wake-up.	
1	INTEN1	R/W	Interrupt enable control of auto ADC conversion done. 0: Disable auto ADC conversion interrupt. 1: Enable auto ADC conversion interrupt.	0x0
0	INTEN0	R/W	Interrupt enable control of manual ADC conversion done. 0: Disable manual ADC conversion interrupt. 1: Enable manual ADC conversion interrupt.	0x0

8.5.19. ANA_ADCCTRL Register

Table 8-20 Description of ANA_ADCCTRL Register

Bit	Name	Type	Description	Default
31	MTRIG	R/W	Manual ADC trigger. Write 0: No effect. Write 1: Start a manual ADC conversion. Read 0: Current manual ADC conversion is done. Read 1: Current manual ADC conversion is ongoing.	0x0
30	-	-	Reserved.	0
29	CICAON	R/W	CIC filter always on control register. 0: CIC filter will be disabled when no ADC sample process is ongoing. 1: CIC filter will be enabled for all the time.	0x0
28	CICINV	R/W	CIC filter input inversion. 0: No invert CIC filter input. 1: Invert CIC filter input.	0x0
27	CICSCA	R/W	CIC output scale-down selection. 0: No scale down CIC filter's output. 1: Scale down CIC filter's output to 1/2.	0x0
26:24	CICSKIP	R/W	CIC output skip control register. This register is used to control how many samples will be skipped at the beginning of ADC sample. If CICAON is 1 and the ADC channel is not changed, the CIC output will not be skipped by the ADC controller, this can be used for high	0x0

			speed capture to single channel. 0: Skip first 4 samples. 1: Skip first 5 samples. 2: Skip first 6 samples. 3: Skip first 7 samples. 4: No skip any sample. 5: Skip first 1 sample. 6: Skip first 2 samples. 7: Skip first 3 samples.	
23:22	DSRSEL	R/W	CIC down sampling rate control register. The higher down-sampling rate, the higher output data stability, and lower sampling rate. 0: 1/512 down-sampling rate. 1: 1/256 down-sampling rate. 2: 1/128 down-sampling rate. 3: 1/64 down-sampling rate.	0x0
21	AMODE	R/W	Auto ADC mode control. 0: Capture single channel specified by ACH. 1: Capture multiple channels (0~11 channels) at one time.	0x0
20	MMODE	R/W	Manual ADC mode control. 0: Capture single channel specified by MCH. 1: Capture multiple channels (0~11 channels) at one time.	0x0
19	-	-	Reserved.	0x0
18:16	AEN	R/W	Auto ADC conversion enable control register. 0: Auto ADC conversion is off. 4: Auto ADC will be triggered by timer 0's overflow. 5: Auto ADC will be triggered by timer 1's overflow. 6: Auto ADC will be triggered by timer 2's overflow. 7: Auto ADC will be triggered by timer 3's overflow.	0x0
15:13	-	-	Reserved.	0
12	CLKSEL	R/W	ADC clock source selection.	0x0

			0: 6.5M RCH 1: PLLL	
11:8	CLKDIV	R/W	The ADC clock source is internal 6.5M RCH or PLLL. The typical ADC main clock is 1.6384MHz, if ADC clock source is 6.5M RCH, CLKDIV is calculated such as: CLKDIV=6.5536/1.6384-1=3.	0x0
7:4	ACH	R/W	Auto ADC channel control. 0: Auto ADC capture ADC channel 0. 1: Auto ADC capture ADC channel 1. …. 11: Auto ADC capture ADC channel 11. 12~15: Reserved. This register is valid only when AMODE is 0.	0x0
3:0	MCH	R/W	Manual ADC channel control. 0: Manual ADC capture ADC channel 0. 1: Manual ADC capture ADC channel 1. …. 11: Auto ADC capture ADC channel 11. 12~15: Reserved. This register is valid only when MMODE is 0.	0x0

8.5.20. ANA_ADCDATAx Register

Table 8-21 Description of ANA_ADCDATAx Register

Bit	Name	Type	Description	Default
31:16	-	-	Reserved.	0
15:0	ADCDATAx	R	The result of ADC conversion will be stored in these registers. DATA0: Store conversion result of ADC channel 0. DATA1: Store conversion result of ADC channel 1. … DATA11: Store conversion result of ADC channel 11. For single channel conversion (MMODE is 0 or AMODE is 0), only the channel specified by MCH or ACH will be	0x--

			updated. For multi-channels conversion (MMODE is 1 or AMODE is 1), DATA0~DATA11 will be updated.	

8.5.21. ANA_CMPCNTx Register

Table 8-22 Description of ANA_CMPCNTx Register

Bit	Name	Type	Description	Default
31:0	CNTx	R/C	This register stores the happen times of comparator x according to the setting in COMPx_SEL. For example, when COMPx_SEL is set to 1, then this counter will increase 1 when the COMPx is rising. This register can be cleared by writing 0 to this register, but this operation is valid only when corresponded CMPPDNx is set to 1 (when the corresponded comparator is enabled).	0x0000000

8.5.22. ANA_MISC Register

Table 8-23 Description of ANA_MISC Register

Bit	Name	Type	Description	Default
31:6	-	-	Reserved.	0
5:4	TADCTH	R/W	TADC threshold setting. This register controls the threshold of TADC's interrupt. The TADC is using internal 32K RC as clock source to sample external signal, when TADC's interrupt is enable and the difference of two continuous cycles is larger than TADCTH, the INTSTS13 will be set and an interrupt will be asserted.	0x0
3:0	-	-	Reserved.	0

9.ADC Controller

9.1. Introduction

One second-order Σ-ΔADC is designed in 12 channels of the V94XX for analog-to-digital conversion, and their full measurement scale is 0~1.2V if no voltage division. After set voltage division, when main power supply is 3.3V, the measurement scale is 0~3.6V. When main power supply is 5V, the measurement scale is 0~4.6V in cap division mode, and the measurement scale is 0~5.2V in resistor division mode. The ADC can be used to measure the ground, temperature, VDD, BATRTC voltage and external voltage signals. The clock source is 6.5536M RC or PLLL. The ADC controller is placed in always-on domain, so all the ADC setting will be kept under deep-sleep mode.

9.2. Feature

-- ADC manual and auto sample mode.

-- ADC interrupt generation.

9.3. Block Diagram

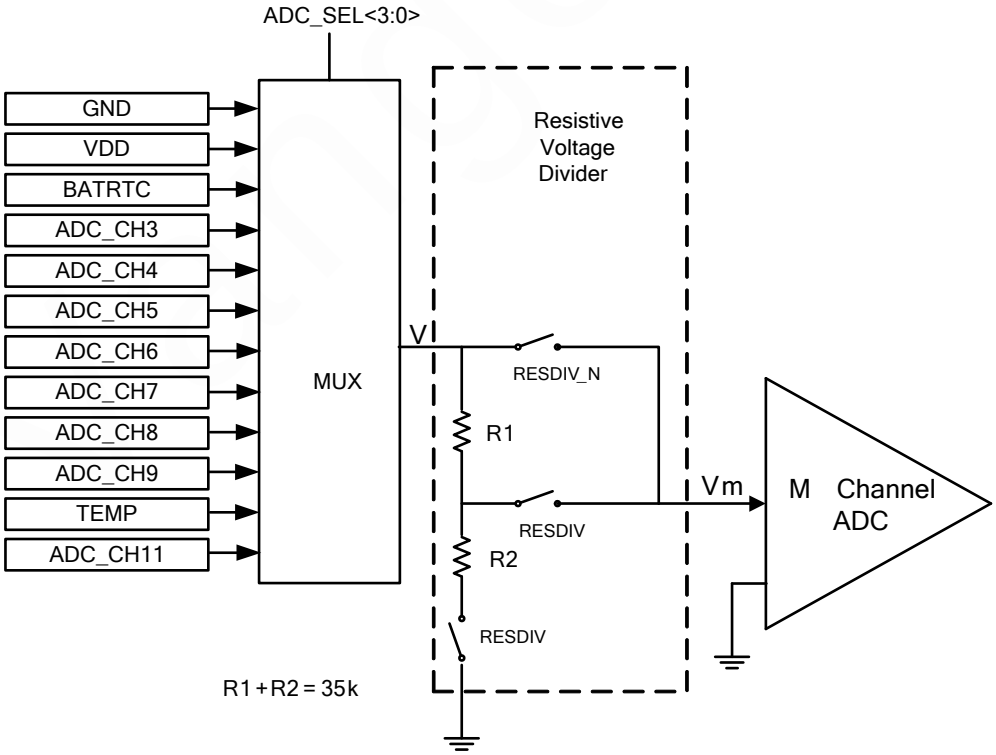

Figure 9-1 ADC Architecture

9.4. Register Location

Table 9-1 Register Location of ANA Controller for ADC (ANA Base: 0x40014200)

Name	Type	Address	Description	Default
ANA_REG0	R/W	0x0000	Analog register 0	0x00
ANA_REG1	R/W	0x0004	Analog register 1	0x00
ANA_REG3	R/W	0x000C	Analog register 3	0x00
ANA_INTSTS	R/C	0x0060	Analog interrupt status register	0x0000
ANA_INTEN	R/W	0x0064	Analog interrupt enable register	0x0000
ANA_ADCCTRL	R/W	0x0068	ADC control register	0x00000000
ANA_ADCDATA0	R	0x0070	ADC channel 0 data register	--
ANA_ADCDATA1	R	0x0074	ADC channel 1 data register	--
ANA_ADCDATA2	R	0x0078	ADC channel 2 data register	--
ANA_ADCDATA3	R	0x007C	ADC channel 3 data register	--
ANA_ADCDATA4	R	0x0080	ADC channel 4 data register	--
ANA_ADCDATA5	R	0x0084	ADC channel 5 data register	--
ANA_ADCDATA6	R	0x0088	ADC channel 6 data register	--
ANA_ADCDATA7	R	0x008C	ADC channel 7 data register	--
ANA_ADCDATA8	R	0x0090	ADC channel 8 data register	--
ANA_ADCDATA9	R	0x0094	ADC channel 9 data register	--
ANA_ADCDATAA	R	0x0098	ADC channel 10 data register	--
ANA_ADCDATAB	R	0x009C	ADC channel 11 data register	--

9.5. Register Definition

9.5.1. ANA_REG1 Register

Table 9-2 Description of each bit in ANA_REG1 of ADC

Bit	Name	Function	Notes
3:0		Reserved.	0
4	RESDIV	Enable resistor division for M ADC's input signal	0: Disable 1: Enable 1/4 resistor division
5	GDE4	Enable cap division for M ADC's input signal	0: Disable 1: Enable 1/4 cap division
7:6		Reserved.	0

9.5.2. ANA_REG3 Register

Table 9-3 Description of each bit in ANA_REG3 of ADC

Bit	Name	Function	Notes
0	ADCPDN	ADC power up control signal. ADC automatic conversion should be disabled before ADC is powered down.	0: Power-down ADC 1: Power-up ADC
3	BGPPD*	BGP power down control signal.	0: Power-up BGP 1: Power-down BGP
4	RCHPD	RCH (6.5536M RC) power down control signal	0: Power-up RCH 1: Power-down RCH
Note*: RCH and PLL and ADC are related to BGP, must power-up BGP before power-up RCH or PLL or ADC. User can power down BGP by set BGPPD to 1 when BGP was not used in program. User could not power down BGP by set BGPPD to 1 when BGP was used in program, because the system has a protection function to ensure reliability. User can power down BGP in sleep mode and deep-sleep mode whether BGP is used or not.			

9.5.3. ANA_INSTS Register

Table 9-4 Description of ANA_INTSTS Register for ADC

Bit	Name	Type	Description	Default
1	INTSTS1	R/C	Interrupt flag of auto ADC conversion done. Read 0: Auto ADC conversion not complete. Read 1: Auto ADC conversion has done. Write 0: No effect. Write 1: clear this bit.	0x0

0	INTSTS0	R/C	Interrupt flag of manual ADC conversion done. Read 0: Manual ADC conversion not complete. Read 1: Manual ADC conversion has done. Write 0: No effect. Write 1: clear this bit.	0x0

9.5.4. ANA_INTEN Register

Table 9-5 Description of ANA_INTEN Register for ADC

Bit	Name	Type	Description	Default
1	INTEN1	R/W	Interrupt enable control of auto ADC conversion done. 0: Disable auto ADC conversion interrupt. 1: Enable auto ADC conversion interrupt.	0x0
0	INTEN0	R/W	Interrupt enable control of manual ADC conversion done. 0: Disable manual ADC conversion interrupt. 1: Enable manual ADC conversion interrupt.	0x0

9.5.5. ANA_ADCCTRL Register

Table 9-6 Description of ANA_ADCCTRL Register

Bit	Name	Type	Description	Default
31	MTRIG	R/W	Manual ADC trigger. Write 0: No effect. Write 1: Start a manual ADC conversion. Read 0: Current manual ADC conversion is done. Read 1: Current manual ADC conversion is ongoing.	0x0
30	-	-	Reserved.	0
29	CICAON	R/W	CIC filter always on control register. 0: CIC filter will be disabled when no ADC sample process is ongoing. 1: CIC filter will be enabled for all the time.	0x0
28	CICINV	R/W	CIC filter input inversion.	0x0

			0: No invert CIC filter input. 1: Invert CIC filter input.	
27	CICSCA	R/W	CIC output scale-down selection. 0: No scale down CIC filter's output. 1: Scale down CIC filter's output to 1/2.	0x0
26:24	CICSKIP	R/W	CIC output skip control register. This register is used to control how many samples will be skipped at the beginning of ADC sample. If CICAON is 1 and the ADC channel is not changed, the CIC output will not be skipped by the ADC controller, this can be used for high speed capture to single channel. 0: Skip first 4 samples. 1: Skip first 5 samples. 2: Skip first 6 samples. 3: Skip first 7 samples. 4: No skip any sample. 5: Skip first 1 sample. 6: Skip first 2 samples. 7: Skip first 3 samples.	0x0
23:22	DSRSEL	R/W	CIC down sampling rate control register. The higher down-sampling rate, the higher output data stability, and lower sampling rate. 0: 1/512 down-sampling rate. 1: 1/256 down-sampling rate. 2: 1/128 down-sampling rate. 3: 1/64 down-sampling rate.	0x0
21	AMODE	R/W	Auto ADC mode control. 0: Capture single channel specified by ACH. 1: Capture multiple channels (0~11 channels) at one time.	0x0
20	MMODE	R/W	Manual ADC mode control. 0: Capture single channel specified by MCH. 1: Capture multiple channels (0~11 channels) at one time.	0x0
19			Reserved.	0

18:16	AEN	R/W	Auto ADC conversion enable control register. 0: Auto ADC conversion is off. 4: Auto ADC will be triggered by timer 0's overflow. 5: Auto ADC will be triggered by timer 1's overflow. 6: Auto ADC will be triggered by timer 2's overflow. 7: Auto ADC will be triggered by timer 3's overflow. Others: Reserved.	0x0
15:13			Reserved.	0
12	CLKSEL	R/W	ADC clock source selection. 0: 6.5M RCH 1: PLLL	0x0
11:8	CLKDIV	R/W	The ADC clock source is internal 6.5M RCH or PLLL. The typical ADC main clock is 1.6384MHz, if ADC clock source is 6.5M RCH, CLKDIV is calculated such as: CLKDIV=6.5536/1.6384-1=3.	0x0
7:4	ACH	R/W	Auto ADC channel control. 0: Auto ADC capture ADC channel 0. 1: Auto ADC capture ADC channel 1. .... 11: Auto ADC capture ADC channel 11. 12~15: Reserved. This register is valid only when AMODE is 0. The ADC sampling channels show as the following table.	0x0
3:0	MCH	R/W	Manual ADC channel control. 0: Manual ADC capture ADC channel 0. 1: Manual ADC capture ADC channel 1. .... 11: Auto ADC capture ADC channel 11. 12~15: Reserved. This register is valid only when MMODE is 0. The ADC sampling channels show as the following table.	0x0

Table 9-7 The ADC Sampling Channels

Bit	Name	value
7:4	ACH	0000: GND; 0001: VDD 0010: BATRTC; 0011: ADC_CH3 0100: ADC_CH4; 0101: ADC_CH5 0110: ADC_CH6; 0111: ADC_CH7 1000: ADC_CH8; 1001: ADC_CH9 1010: TEMP; 1011: ADC_CH11 1100~1111: Reserved.
3:0	MCH	

9.5.6. ANA_ADCDATAx Register

Table 9-8 Description of ANA_ADCDATAx Register

Bit	Name	Type	Description	Default
31:16	-	-	Reserved.	0
15:0	ADCDATAx	R	The result of ADC conversion will be stored in these registers. DATA0: Store conversion result of ADC channel 0. DATA1: Store conversion result of ADC channel 1. … DATA11: Store conversion result of ADC channel 11. For single channel conversion (MMODE is 0 or AMODE is 0), only the channel specified by MCH or ACH will be updated. For multi-channels conversion (MMODE is 1 or AMODE is 1), DATA0~DATA11 will be updated.	0x--

9.6. Measuring Battery Voltage and External Voltage

In the V94XX, ADC can be used to measure external voltage signals by ADC_CHx, and can be used to

measure VDD/BATRTC signals.

ADC channel mode: single channel; multi-channel.

ADC trigger mode: auto triggered by timer; manual trigger.

Divider mode: no divider; resistive divider; capacitive divider. Resistance voltage divider has extra power consumption. Because there are 35kΩ resistors in the internal resistive divider network, this network consumes power:

$P = U_D \times I_D = V \times \frac{V}{R_1 + R_2} = \frac{V^2}{35}$	Equation 9-1

The voltage of ordinary channels (ADC_CHx): channel 3, 4, 5, 6, 7, 8, 9 and 11.

The voltage of VDD channels: channel 1.

The voltage of BATRTC channels: channel 2.

User needs to check whether a and b (A and B) parameters of storage area used to store ADC coefficients are legal. If so, the data of the storage area is used for calculation; if not, the ADC coefficient is used for calculation with fixed parameters. The calculation formula is shown in Table 4-20 Info Information Register, voltage measuring range and formula. A and b (a and b) of ADC coefficients are shown in Table 4-20 Info Information Register.

Table 9-9 Voltage measurement range and formula

Power	Channel	Divider Mode	Signal range (V)	Formula
3.3V	ADC_CHx	No divider	-0.2~1.2	If a and b parameters of ADC are valid, $V_{DC} = a1 \div 100000000 * X + b1 \div 100000000$ else $V_{DC} = 0.00003680 * X + 0.00205011$
		Resistive	-0.2~3.6	If a and b parameters of ADC are valid, $V_{DC} = a2 \div 100000000 * X + b2 \div 100000000$ else $V_{DC} = 0.00016425 * X + 0.03739179$
		Capacitive	-0.2~3.6	If a and b parameters of ADC are valid, $V_{DC} = a3 \div 100000000 * X + b3 \div 100000000$ else $V_{DC} = 0.00014051 * X - 0.00023322$
	VDD channels	Resistive	2.5~4.8	If a and b parameters of ADC are valid, $V_{DC} = a4 \div 100000000 * X + b4 \div 100000000$ else

				$V_{DC}=0.00015392*X+0.06667986+OffsetBatR\div1000$
		Capacitive	2.5~4.6	If a and b parameters of ADC are valid, $V_{DC}=a5\div100000000*X+b5\div100000000$ else $V_{DC}=0.00014107*X-0.00699515+OffsetBatC\div1000$
	BATRTC channels	Resistive	0.7~4.8	If a and b parameters of ADC are valid, $V_{DC}=a6\div100000000*X+b6\div100000000$ else $V_{DC}=0.00015392*X+0.06667986+OffsetBatR\div1000$
		Capacitive	0.7~4.6	If a and b parameters of ADC are valid, $V_{DC}=a7\div100000000*X+b7\div100000000$ else $V_{DC}=0.00014107*X-0.00699515+OffsetBatC\div1000$
5V	ADC_CHx	No divider	-0.2~1.2	If A and B parameters of ADC are valid, $V_{DC}=A1\div100000000*X+B1\div100000000$ else $V_{DC}=0.00003678*X+0.00235783$
		Resistive	-0.2~4.8	If A and B parameters of ADC are valid, $V_{DC}=A2\div100000000*X+B2\div100000000$ else $V_{DC}=0.00016129*X+0.00673599$
		Capacitive	-0.2~4.6	If A and B parameters of ADC are valid, $V_{DC}=A3\div100000000*X+B3\div100000000$ else $V_{DC}=0.00014076*X-0.00753319$
	VDD channels	Resistive	2.5~4.8	If A and B parameters of ADC are valid, $V_{DC}=A4\div100000000*X+B4\div100000000$ else $V_{DC}=0.00015392*X+0.06667986+OffsetBatR\div1000$
		Capacitive	2.5~4.6	If A and B parameters of ADC are valid, $V_{DC}=A5\div100000000*X+B5\div100000000$ else $V_{DC}=0.00014107*X-0.00699515+OffsetBatC\div1000$
	BATRTC channels	Resistive	0.7~4.8	If A and B parameters of ADC are valid, $V_{DC}=A6\div100000000*X+B6\div100000000$ else $V_{DC}=0.00015392*X+0.06667986+OffsetBatR\div1000$
		Capacitive	0.7~4.6	If A and B parameters of ADC are valid,

				$V_{DC} = A7 \div 100000000 * X + B7 \div 100000000$ else $V_{DC} = 0.00014107 * X - 0.00699515 + OffsetBatC \div 1000$

In the above equations,

$X = ADC_DATAx$	Equation 9-2

Where:

ADC_DATAx is the content of bytes located at addresses (0x40014270+4x), x is channel 0~11.

9.7. Measuring Temperature

When the ADC channel you choose is TEMPERATURE (CH10), you should not set capacitive division. The temperature measurement range is over -40~+85°C.

It is recommended to measure temperature following steps:

1. Set ADC to start working.

   Users must set ADC CLK to 1.6384 MHz, and set DSRSEL to 1/512 down-sampling rate, with no voltage division or resistor division, then start ADC conversion.

2. Wait for read 1 from ANAINSTS (0x40014260)(ANAINTSTS0(bit 0)/ANAINSTS1(bit 1) in auto/manual mode), and then read the register ADC_DATAA (0x40014298).

3. Calibrate temperature T: (in unit of 8.8 format ℃). The format of T is 16-bit signed value, including 8 bits integer and 8 bits fraction signed value. The actual temperature is equal to T/256.0. For example, 0x1880 means 24.5 ℃.

$T = ((P0 * ((X * X) >> 16)) + P1 * X + P2) >> 8$	Equation 9-3

where X is the reading of register ADC_DATAA(in hexadecimal);

where P0 is the content of bytes located at addresses 0x40D00(16bit);

where P1 is the content of bytes located at addresses 0x40D02(16bit);

where P2 is calculated by the following equation:

$P2 = P2' + (Tr - Tm) * 256$	Equation 9-4

where P2′ is the content of bytes located at addresses 0x40D04(32bit);

where Tr is the content of bytes located at addresses 0x40D70(32bit);

where Tm is the content of bytes located at addresses 0x40D74(32bit).

Note:

To enhance ADC data quality in the channel 10 for the temperature sensor, four-sample moving average

is implemented. The four buffers used to average are first-in first-out queues, which are reset to zero by DPOR. Every time a user makes an ADC conversion, the hardware writes a data to the buffer, and calculates the average value of the data of the four buffers inside, and puts it in the register of ADC_DATAA. Therefore, in order to get the exact temperature value of a certain temperature, users need to convert ADC four times continuously and take the last ADC_DATAA register data as ADC data.

Vangotech

10. Comparator Controller

10.1. Introduction

The V94XX integrates two comparators to compare the analog signals. Three patterns can be selected as input sources:

- Positive signal input on pin CMP_P and negative signal input on pin CMP_N;
- Positive signal input on pin CMP_P and negative signal from BGPREF or VREF;
- Positive signal input on pin CMP_N and negative signal from BGPREF or VREF.

Each comparator have hysteresis voltage of 20mV.

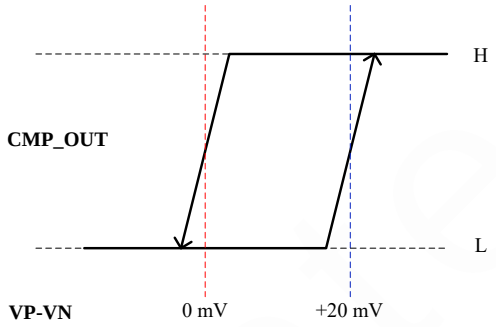

Figure 10-1 hysteresis Window of CMP Controller

10.2. Feature

-- Interrupt/wake-up signal generated for analog detect flag.

-- Comparator interrupt generation.

-- Comparator counter.

10.3. Block Diagram

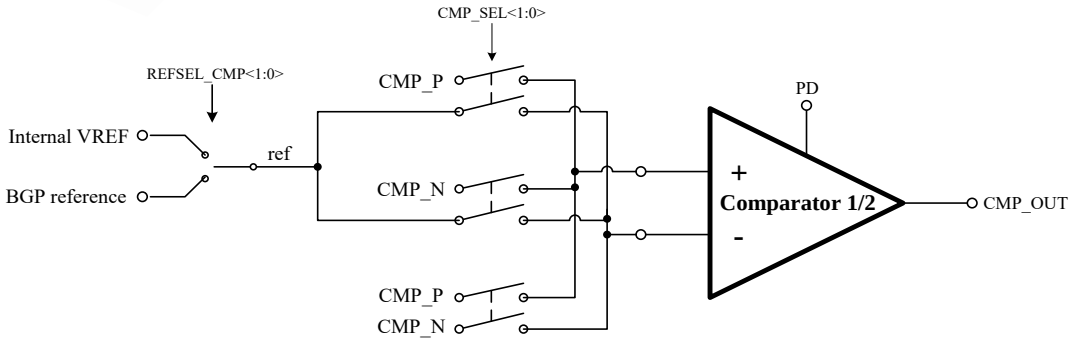

Figure 10-2 Functional Block Diagram of CMP Controller

10.4. Register Location

Table 10-1 Register Location of ANA Controller for CMP (ANA Base: 0x40014200)

Name	Type	Address	Description	Default
ANA_REG2	R/W	0x0008	Analog register 2	0x00
ANA_REG3	R/W	0x000C	Analog register 3	0x00
ANA_REG5	R/W	0x0014	Analog register 5	0x00
ANA_CTRL	R/W	0x0050	Analog control register	0x0000000
ANA_CMPOUT	R	0x0054	Comparator result register	0x0030
ANA_INTSTS	R/C	0x0060	Analog interrupt status register	0x0000
ANA_INTEN	R/W	0x0064	Analog interrupt enable register	0x0000
ANA_CMPCNT1	R/C	0x00B0	Comparator 1 counter	0x00000000
ANA_CMPCNT2	R/C	0x00B4	Comparator 2 counter	0x00000000

10.5. Register Definition

10.5.1. ANA_REG2 Register

Table 10-2 Description of each bit in ANA_REG2 for CMP

Bit	Name	Function	Notes
1:0	CMP1_SEL[1:0]	Signal source selection of comparator 1	00 CMP1_P to REF 01: CMP1_N to REF 1*: CMP1_P to CMP1_N
3:2	CMP2_SEL[1:0]	Signal source selection of comparator 2	00: CMP2_P to REF 01: CMP2_N to REF 1*: CMP2_P to CMP2_N
4	REFSEL_CMP1	REF selection of CMP1	0: VREF 1: BGPREF.
5	REFSEL_CMP2	REF selection of CMP2	0: VREF 1: BGPREF.

10.5.2. ANA_REG3 Register

Table 10-3 Description of each bit in ANA_REG3 for CMP

Bit	Name	Function	Notes
1	CMP1PDN	CMP1 power up control signal	0: Power-down CMP1 1: Power-up CMP1
2	CMP2PDN	CMP2 power up control signal	0: Power-down CMP2 1: Power-up CMP2
3	BGPPD*	BGP power down control signal.	0: Power-up BGP 1: Power-down BGP
Note*: RCH and PLL and ADC are related to BGP, You must power-up BGP before you power-up RCH or PLL or ADC. User can power down BGP by set BGPPD to 1 when BGP was not used in program. User could not power down BGP by set BGPPD to 1 when BGP was used in program, because the system has a protection function to ensure reliability. User can power down BGP in sleep mode and deep-sleep mode whether BGP is used or not.			

10.5.3. ANA_REG5 Register

Table 10-4 Description of each bit in ANA_REG5 for CMP

Bit	Name	Function	Notes
1:0	IT_CMP1[1:0]	Bias current selection of CMP1	00: 20nA; 01: 100nA; 1*: 500nA;
3:2	IT_CMP2[1:0]	Bias current selection of CMP2	00: 20nA; 01: 100nA; 1*: 500nA;
Note: The smaller the CMP bias current, the lower the power consumption and the longer the propagation delay time; the higher the CMP bias current, the higher the power consumption and the shorter the propagation delay time.			

10.5.4. ANA_CTRL Register

Table 10-5 Description of ANA_CTRL Register for CMP

Bit	Name	Type	Description	Default
23:22	CMP2DEB	R/W	Comparator 2 de-bounce control register.	0x0

			0: No de-bounce. 1: 2 RTCCLK de-bounce. 2: 3 RTCCLK de-bounce. 3: 4 RTCCLK de-bounce. When de-bounce is enabled, the input signal is valid only when the signal isn't change in multi-cycles of RTCCLK clock. And, the response time of the wake-up and interrupt will be delayed until the signal is valid. This circuit can work under all mode including sleep and deep-sleep mode.	
21:20	CMP1DEB	R/W	Comparator 1 de-bounce control register. 0: No de-bounce. 1: 2 RTCCLK de-bounce. 2: 3 RTCCLK de-bounce. 3: 4 RTCCLK de-bounce. When de-bounce is enabled, the input signal is valid only when the signal isn't change in multi-cycles of RTCCLK clock. And, the response time of the wake-up and interrupt will be delayed until the signal is valid. This circuit can work under all mode including sleep and deep-sleep mode.	0x0
19:18			Reserved.	0
3:2	COMP2_SEL	R/W	This register is used to control the interrupt and wake-up signal generation of COMP2. 0: Off 1: Rising edge of COMP2. 2: Falling edge of COMP2. 3: Change of COMP2.	0x0
1:0	COMP1_SEL	R/W	This register is used to control the interrupt and wake-up signal generation of COMP1. 0: Off 1: Rising edge of COMP1. 2: Falling edge of COMP1. 3: Change of COMP1.	0x0

10.5.5. ANA_CMPOUT Register

Table 10-6 Description of ANA_CMPOUT Register for CMP

Bit	Name	Type	Description	Default
3	COMP2	R	This bit shows the output of comparator 2.	0x0
2	COMP1	R	This bit shows the output of comparator 1.	0x0

10.5.6. ANA_INSTS Register

Table 10-7 Description of ANA_INTSTS Register for CMP

Bit	Name	Type	Description	Default
3	INTSTS3	R/C	Interrupt flag of COMP2, the interrupt generate condition is controlled by COMP2_SEL. Read 0: No COMP2 interrupt. Read 1: COMP2 interrupt is happened. Write 0: No effect. Write 1: Clear this bit.	0x0
2	INTSTS2	R/C	Interrupt flag of COMP1, the interrupt generate condition is controlled by COMP1_SEL. Read 0: No COMP1 interrupt. Read 1: COMP1 interrupt is happened. Write 0: No effect. Write 1: Clear this bit.	0x0

10.5.7. ANA_INTEN Register

Table 10-8 Description of ANA_INTEN Register for CMP

Bit	Name	Type	Description	Default
3	INTEN3	R/W	Interrupt and wake-up enable control of COMP2. 0: Disable COMP2 interrupt and wake-up. 1: Enable COMP2 interrupt and wake-up.	0x0
2	INTEN2	R/W	Interrupt and wake-up enable control of COMP1. 0: Disable COMP1 interrupt and wake-up.	0x0

			1: Enable COMP1 interrupt and wake-up.	

10.5.8. ANA_CMPCNTx Register

Table 10-9 Description of ANA_CMPCNTx Register

Bit	Name	Type	Description	Default
31:0	CNTx	R/C	This register store the happen times of comparator x according to the setting in COMPx_SEL. For example, when COMPx_SEL is set to 1, then this counter will increase 1 when the COMPx is rising. This register can be cleared by writing 0 to this register, but this operation is valid only when corresponded CMPPDNx is set to 1 (when the corresponded comparator is enabled).	0x0000000

11. Tiny ADC Controller

11.1. Introduction

The Tiny ADC (2 BIT ADC) controller is used to control the Tiny ADC function of V94XX. TinyADC is powered by AVCC. TinyADC controller is placed in always-on domain, so all the tiny ADC setting will be kept under deep-sleep mode.

11.2. Feature

-- TinyADC interrupt generation.

11.3. Block Diagram

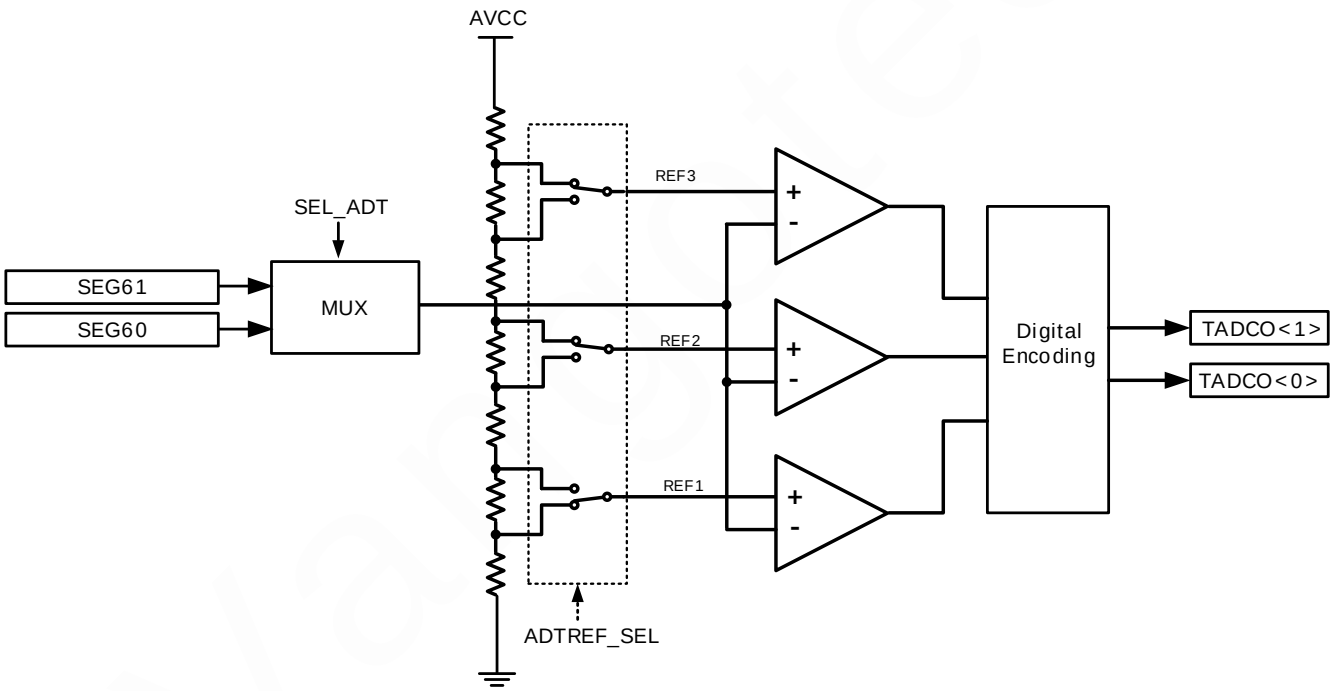

Figure 11-1 Functional Block Diagram of Analog Controller

11.4. Register Location

Table 11-1 Register Location of ANA Controller for TADC(ANA Base: 0x40014200)

Name	Type	Address	Description	Default
ANA_REGF	R/W	0x003C	Analog control register 15	0x00
ANA_CMPOUT	R	0x0054	Comparator result register	0x0030
ANA_INTSTS	R/C	0x0060	Analog interrupt status register	0x0000

ANA_INTEN	R/W	0x0064	Analog interrupt enable register	0x0000
ANA_MISC	R/W	0x00B8	Analog misc. control register	0x00

11.5. Register Definition

11.5.1. ANA_REGF Register

Table 11-2 Description of each bit in ANA_REGF for TADC

Bit	Name	Function	Notes
3	PDN_ADT	Power up Tiny ADC	0: Power down. 1: Power up
4	SEL_ADT	Signal selection for TADC	0: Connect to IOE6 1: Connect to IOE7
5	ADTREF1_SEL	REF1 of TADC selection	0: 0.9V 1: 0.7V
6	ADTREF2_SEL	REF2 of TADC selection	0: 1.8V 1: 1.6V
7	ADTREF3_SEL	REF3 of TADC selection	0: 2.7V 1: 2.5V

11.5.2. ANA_CMPOUT Register

Table 11-3 Description of ANA_CMPOUT Register for TADC

Bit	Name	Type	Description	Default
15:14	TADCO	R	Tiny ADC output. For example, if all the ADTREFx_SEL set to 0, TADCO value as follows. When signal <0.9V, TADCO =0, When signal >0.9V && <1.8V, TADCO =1, When signal >1.8V && <2.7V, TADCO =2, When signal >2.7V, TADCO =3.	-

11.5.3. ANA_INSTS Register

Table 11-4 Description of ANA_INTSTS Register for TADC

Bit	Name	Type	Description	Default
31:14	-	-	Reserved.	0
13	INTSTS13	R/C	TADC change over-threshold interrupt. This interrupt will be set when the TADC is rising or falling and the change value compare to previous cycle is larger than or equal to the threshold setting in the TADCTH in ANA_MISC register, this interrupt flag will be set. Read 0: No TADC over threshold interrupt. Read 1: TADC over threshold is happened. Write 0: No effect. Write 1: Clear this bit.	0x0

11.5.4. ANA_INTEN Register

Table 11-5 Description of ANA_INTEN Register for TADC

Bit	Name	Type	Description	Default
31:14	-	-	Reserved.	0
13	INTEN13	R/W	Interrupt and wake-up enable control of TADC change over or equal to threshold. 0: Disable TADC interrupt and wake-up. 1: Enable TADC interrupt and wake-up.	0x0

11.5.5. ANA_MISC Register

Table 11-6 Description of ANA_MISC Register

Bit	Name	Type	Description	Default
31:6	-	-	Reserved.	0
5:4	TADCTH*	R/W	TADC threshold setting. This register controls the threshold of TADC's interrupt. The TADC is using internal 32K RC as clock source to sample external signal, when TADC's interrupt is enable and the difference of two continuous cycles is larger than or equal to TADCTH, the INTSTS13 will be set and an	0x0

			interrupt will be asserted.	
3:0	-	-	Reserved.	0

Note*: Bit3:0 of ANA_MISC register should be set 0 all the time.

Vangotech

12. PMU_WDT Unit

12.1. Introduction

In the V94XX, the embedded 16-bit watchdog timer (WDT) counting pulses of the 32kHz RTCCLK clock.
When the program gets stuck somewhere, the timer overflows and reset the system to cause the program start from the beginning. WDT's reset level is the same as POR reset, it can provide chip's internal reset.

12.2. Features

--WDT counting period:2s\1s\0.5s\0.25s.

--Password protection to avoid close WDT in un-expected event.

12.3. WDT State in Different Modes

For different mode, the enable or disable of WDT module will be controlled by hardware or software, the following table shows the detail of WDT status under each mode when MODE (PMU_STS register bit24) is 1. If MODE (PMU_STS register bit24) is 0, WDT is invalid in all modes.

Table 12-1 WDT Enable or Disable in Different Modes (MODE=1)

WDT	Power modes				
	RTC only	Deep sleep	Sleep	IDLE	Active
State	Invalid	ON(WDTEN = 1) OFF(WDTEN = 0)	ON(WDTEN = 1) OFF(WDTEN = 0)	ON(WDTEN = 1) OFF(WDTEN = 0)	ON(WDTEN = 1) OFF(WDTEN = 0)
WDT	Exit RTC only mode	Wake up from different modes			
		Deep sleep		Sleep	IDLE
State	ON	ON		ON	ON(WDTEN = 1) OFF(WDTEN = 0)

12.4. Block Diagram

12.5. Register Location

Table 12-2 Register Location of the PMU_WDT Controller (PMU Base: 0x40014000)

Name	Type	Address	Description	Default
PMU_WDTPASS	R/W	0x0040	Watch dog timing unlock register	0x00000000
PMU_WDTEN	R/W	0x0044	Watch dog timer enable register	0x1
PMU_WDTCLR	W	0x0048	Watch dog timer clear register	0x0000

12.6. Register Definitions

12.6.1. PMU_WDTPASS Register

Table 12-3 Description of PMU_WDTPASS Register

Bit	Name	Type	Description	Default
31:1	-	-	Reserved.	0
0	UNLOCK	R	This bit indicates the watch dog timer enable register has been unlocked and is ready to change the watch dog enable control register. To set this bit to 1, programmer should write 0xAA5555AA to this register. This bit will be cleared immediately after any register write to any PMU control register, including ICE write, so programmer should set the PMU_WDTEN immediately after the UNLOCK bit is set to 1, otherwise the UNLOCK procedure should start again.	0x0

12.6.2. PMU_WDTEN Register

Table 12-4 Description of PMU_WDTEN Register

Bit	Name	Type	Description	Default
31:4	-	-	Reserved.	0
3:2	WDTSEL	R/W	This register is used to control the WDT counting period. 0: 2 secs 1: 1 sec 2: 0.5 secs 3: 0.25 secs To change the value of this register, UNLOCK bit of PMU_WDTPASS should be set to 1 first.	0x0
1	-	-	Reserved.	0

0	WDTEN	R/W	This bit indicates the watch dog timer is enable. To change the value of this register, UNLOCK bit of PMU_WDTPASS should be set to 1 first.	0x1

12.6.3. PMU_WDTCLR Register

Table 12-5 Description of PMU_WDTCLR Register

Bit	Name	Type	Description	Default
31:16	-	-	Reserved.	0
15:0	WDTCNT	R/C	This register shows the current counter value of wat dog timer. When this timer count to limit value set by WDTSEL, the WDT will issue a system reset. So programmer should clear this timer in a regulator time to avoid WDT reset. To clear this timer programmer should write 0x55AAAA55 to this register. During debug mode, this register will be cleared to 0 automatically and no WDT reset will be issued under the debug mode.	0x0

13. RTC Controller

13.1. Introduction

The RTC controller is used to control time calculation and RTC calibration function. The time calculation function can realize the year, month, week, day, hour, minute, second automatically calculation function and the leap year detection. RTC correction function can automatically correct RTC by software in the background which can detect temperature and adjust one second clock period to compensate the clock shift caused by temperature variation. There are also multi-second, multi-minutes, and multi-hours auto wake-up timer embedded in the RTC engine.

13.2. Feature

--BCD format Time Calculation from second to year.

--Automatically leap year detection.

--Support 32768 frequency compensation.

--Programmable multiple wake-up source.

--Initialize calibration engine for manufactory.

--RTC clock scaling for lower power consumption under sleep/deep-sleep mode.

13.3. Block Diagram

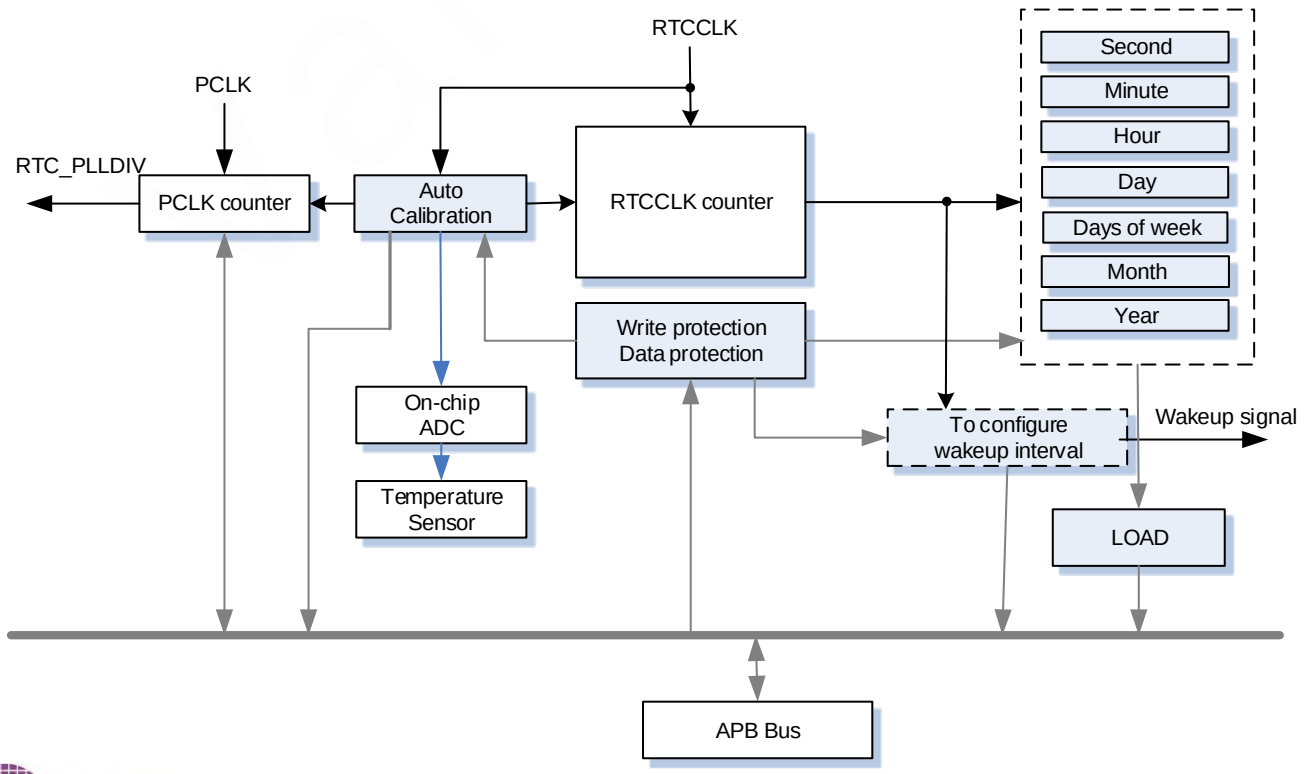

Figure 13-1 Functional Block Diagram of RTC Controller

13.4. Reading and Writing of RTC Register

13.4.1. Writing of RTC

In the V94XX, some RTC registers are protected by write protection, including RTC timing registers and RTC calibration registers and so on. For details, please refer to the table 13-1.

The MCU must write of these registers following steps as:

1. User must wait until BSY (bit1 of register RTC_CE) is 0, to ensure the state of RTC is idle;
2. Writing 0x5AA55AA5 to the register RTC_PWD to enable the RTC_CE port's access;
3. Writing 0xA55AA55B to the register RTC_CE to enable writing of write protection registers.
4. Configuring write protection registers. RTC_SEC ~ RTC_YEAR register should be configured together;
5. Writing 0x5AA55AA5 to the register RTC_PWD to enable the RTC_CE port's access;
6. Writing 0xA55AA55A to the register RTC_CE to clear CE (bit0 of register RTC_CE) flag, and BSY (bit1 of register RTC_CE) flag will be set immediately after the CE is cleared from 1 to 0. After CE is cleared to 0, the contents of write protection registers update to RTC core will be start. The update procedure take around 3 32K period, which is around 100us.
7. User must wait until BSY (bit1 of register RTC_CE) cleared to 0 automatically after sixth step configuration, to ensure RTC update is done.

The MCU can write a register that without write protection directly.

13.4.2. Reading of RTC

RTC timing registers are protected from reading. For details, please refer to the Table 13-1.

To read the timing registers, the MCU must read these registers following steps as:

1. User must wait until BSY (bit1 of register RTC_CE) is 0, to ensure the state of RTC is idle;
2. The MCU must read register RTC_LOAD firstly, BSY (bit1 of register RTC_CE) will be set immediately when RTC_LOAD port is read by MCU. BSY will cleared automatically after the read procedure is done, the read procedure take around 3 32K period, which is around 100 μS;
3. After the read procedure of RTC_LOAD is done, the current timed will be latched and programmer can read data from RTC_SEC ~ RTC_YEAR register.

The MCU can read a register that without read protection directly.

13.5. Register Location

The following table shows the register location of each register. The column "Write Protect means the

register can only be written when CE is set to 1, and will be updated to RTC core only when CE is cleared to 0. The column "Read protect" means the value in these register will be updated only when RTC_LOAD port is read and BSY bit is cleared to 0.

Table 13-1 Register Location of RTC Controller (RTC Base: 0x40014800)

Name	Type	Address	Description	Default	Write Protect	Read Protect
RTC_SEC	R/W	0x0000	RTC second register	--	V	V
RTC_MIN	R/W	0x0004	RTC minute register	--	V	V
RTC_HOUR	R/W	0x0008	RTC hour register	--	V	V
RTC_DAY	R/W	0x000C	RTC day register	--	V	V
RTC_WEEK	R/W	0x0010	RTC week-day register	--	V	V
RTC_MON	R/W	0x0014	RTC month register	--	V	V
RTC_YEAR	R/W	0x0018	RTC year register	--	V	V
RTC_WKUSEC	R/W	0x0020	RTC wake-up second register	0x00	V	
RTC_WKUMIN	R/W	0x0024	RTC wake-up minute register	0x00	V	
RTC_WKUHOUR	R/W	0x0028	RTC wake-up hour register	0x00	V	
RTC_WKUCNT	R/W	0x002C	RTC wake-up counter register	0x0000000	V	
RTC_CAL	R/W	0x0030	RTC calibration register	--	V	
RTC_DIV	R/W	0x0034	RTC PLL divider register	0x0000000		
RTC_CTL	R/W	0x0038	RTC PLL divider control register	0x0		
RTC_PWD	R/W	0x0044	RTC password control register	0x00000000		
RTC_CE	R/W	0x0048	RTC write enable control register	0x0		
RTC_LOAD	R/W	0x004C	RTC read enable control register	--		
RTC_INTSTS	R/W	0x0050	RTC interrupt status control register	0x000		
RTC_INTEN	R/W	0x0054	RTC interrupt enable control register	0x000		
RTC_PSCA	R/W	0x0058	RTC clock pre-scaler control register	0x0	V	
RTC_ACTI	R/W	0x0084	RTC center temperature control register	0x1800	V	
RTC_ACF200	R/W	0x0088	RTC 200*frequency control	0x640000	V	

			register			
RTC_ACP0	R/W	0x0090	RTC parameter 0 control register	0x0000	V	
RTC_ACP1	R/W	0x0094	RTC parameter 1 control register	0x0000	V	
RTC_ACP2	R/W	0x0098	RTC parameter 2 control register	0x0000	V	
RTC_ACP3	R	0x009C	RTC parameter 3 control register	0x0000		
RTC_ACP4	R/W	0x00A0	RTC parameter 4 control register	0x0000	V	
RTC_ACP5	R/W	0x00A4	RTC parameter 5 control register	0x0000	V	
RTC_ACP6	R/W	0x00A8	RTC parameter 6 control register	0x0000	V	
RTC_ACP7	R/W	0x00AC	RTC parameter 7 control register	0x0000	V	
RTC_ACK1	R/W	0x00B0	RTC parameter k1 control register	0x0000	V	
RTC_ACK2	R/W	0x00B4	RTC parameter k2 control register	0x0000	V	
RTC_ACK3	R/W	0x00B8	RTC parameter k3 control register	0x0000	V	
RTC_ACK4	R/W	0x00BC	RTC parameter k4 control register	0x0000	V	
RTC_ACK5	R/W	0x00C0	RTC parameter k5 control register	0x0000	V	
RTC_WKUCNTR	R	0x00CC	This register is used to represent the current WKUCNT value	0x000000		
RTC_ACKTEMP	R/W	0x00D0	RTC k temperature section control register	0x3C2800EC	V	

13.6. Register Definition

13.6.1. RTC_SEC/MIN/DAY/WEEK/MONTH/YEAR Register

The time register is following the BCD encode, where the bit 7~4 is represent the 10's digit and bit 3~0

is for 1's digit. The value in these register can be set only when CE is high, and it will be update to RTC core only when the CE is cleared from 1 to 0. To read current time, programmer should process a read operation to RTC_LOAD register, and wait until the BSY bit is cleared. Otherwise, the register value will be invalid.

Table 13-2 Description of RTC_SEC/MIN/DAY/WEEK/MONTH/YEAR Register

Register		Bit7	Bit6	Bit5	Bit4	Bit3	Bit2	Bit1	Bit0
0x0000	RTC_SEC, 0~59	-	S40	S20	S10	S8	S4	S2	S1
0x0004	RTC_MIN, 0~59	-	M40	M20	M10	M8	M4	M2	M1
0x0008	RTC_HOUR,0~23	-	-	H20	H10	H8	H4	H2	H1
0x000C	RTC_DAY, 1~31	-	-	D20	D10	D8	D4	D2	D1
0x0010	RTC_WEEK, 0~6	-	-	-	-	-	W4	W2	W1
0x0014	RTC_MON, 1~12	-	-	-	Mo10	Mo8	Mo4	Mo2	Mo1
0x0018	RTC_YEAR, 00~99	Y80	Y40	Y20	Y10	Y8	Y4	Y2	Y1
Default		X	X	X	X	X	X	X	X

"week" can only be set by user, RTC will not detect automatically. After initialize setting, RTC will increase the week count automatically. For example, when user set 2010/1/1 as Friday, RTC will detect 2010/01/02 as Saturday. W4/W2/W1:000, Sunday; 001, Monday; 010, Tuesday; 011, Wednesday; 100, Thursday; 101, Friday; 110, Saturday.

System can only set the last two digit of year, for example, when setting year 2010, RTC_YEAR should be set as 0b00010000.

13.6.2. RTC_WKUSEC Register

Table 13-3 Description of RTC_WKUSEC Register

Bit	Name	Type	Description	Default
31:6	-	-	Reserved.	0
5:0	WKUSEC	R/W	This register is used to control the multi-second wake-up function. The wake-up period is (WKUSEC + 1)*1 second. When the INTEN[2] is 1 and the internal wake-up second count is reach the target value, the INTSTS[2] will be set to 1 and wake-up signal will be asserted to PMU controller. For the first interrupt generated by WKUSEC, it may have < 1 sec error if the new WKUSEC number is not equal to current WKUSEC number. If the new WKUSEC is equal to current WKUSEC, the first interrupt time may have 0~(WKUSEC +1) variation. To avoid this problem, set an alternative value (like 0) to this register and update	0x00

			it with RTC_CE operation. Then set the correct value to it.	

13.6.3. RTC_WKUMIN Register

Table 13-4 Description of RTC_WKUMIN Register

Bit	Name	Type	Description	Default
31:6			Reserved.	0
5:0	WKUMIN	R/W	This register is used to control the multi-minute wake-up function. The wake-up period is (WKUMIN + 1)*1 minute. When the INTEN[3] is 1 and the internal wake-up minute count is reach the target value, the INTSTS[3] will be set to 1 and wake-up signal will be asserted to PMU controller. For the first interrupt generated by WKUMIN, it may have < 1 minute error if the new WKUMIN number is not equal to current WKUMIN number. If the new WKUMIN is equal to current WKUMIN, the first interrupt time may have 0~(WKUMIN +1) variation. To avoid this problem, set an alternative value (like 0) to this register and update it with RTC_CE operation. Then set the correct value to it.	0x00

13.6.4. RTC_WKUHOUR Register

Table 13-5 Description of RTC_WKUHOUR Register

Bit	Name	Type	Description	Default
31:5			Reserved.	0
4:0	WKUHOUR	R/W	This register is used to control the multi-hour wake-up function. The wake-up period is (WKUHOUR + 1)*1 hour. When the INTEN[4] is 1 and the internal wake-up hour count is reach the target value, the INTSTS[4] will be set to 1 and wake-up signal will be asserted to PMU controller. For the first interrupt generated by WKUHOUR, it may have < 1 hour error if the new WKUHOUR number is not equal to current WKUHOUR number. If the new WKUHOUR is equal to current WKUHOUR, the first interrupt time may have 0~(WKUHOUR +1) variation. To avoid this problem, set an alternative value (like 0) to this register and update it with RTC_CE operation. Then set the correct value to it.	0x00

13.6.5. RTC_WKUCNT Register

Table 13-6 Description of RTC_WKUCNT Register

Bit	Name	Type	Description	Default
31:26			Reserved.	0
25:24	CNTSEL	R/W	This is register is used to set the counter clock of WKUCNT. When PSCA is 0. 0: Counter clock is 32768Hz 1: Counter clock is 2048Hz. 2: Counter clock is 512Hz 3: Counter clock is 128Hz When PSCA is 1. 0: Counter clock is 8192Hz 1: Counter clock is 2048Hz. 2: Counter clock is 512Hz 3: Counter clock is 128Hz	0x0
23:0	WKUCNT	R/W	This register is used to control the 32K counter wake-up function. The wake-up period is (WKUCNT + 1)*Counter Clock Cycle. The counter clock is controlled by CNTSEL. When the INTEN[6] is 1 and the internal wake-up count is reach the target value, the INTSTS[6] will be set to 1 and wake-up signal will be asserted to PMU controller.	0x0000

13.6.6. RTC_CAL Register

Table 13-7 Description of RTC_CAL Register

Bit	Name	Type	Description	Default
31:14			Reserved.	0
13:0	CAL	R/W	RTC 32768 calibration register, this register is a 14 bits signed value. The RTC engine will do calibration for every 30 seconds, the internal counter will count 32768 times during 1~29 second. At the 30 second, it will count [32768-(CAL-1)] for a second, so it can let the average 1 second pulse in 30 seconds become an accurate 1 second pulse. The PPM resolution of the CAL	--

			register is 1.02ppm, and the adjustable range is ±8332.3ppm (±12 minutes/day). When RTC is corrected manually, the value of this register needs to be updated manually.	

13.6.7. RTC_DIV Register

Table 13-8 Description of RTC_DIV Register

Bit	Name	Type	Description	Default
31:26			Reserved.	0
25:0	RTCDIV	R/W	This register is used to generate divider output. The output frequency is PCLK/(2*(RTCDIV+1)). When RTC is corrected manually, the value of this register needs to be updated manually.	0x0000

13.6.8. RTC_CTL Register

Table 13-9 Description of RTC_CTL Register

Bit	Name	Type	Description	Default
31:3			Reserved.	0
2	RTCPLLOE	R/W	RTC_PLLDIV Divider output enable, this register is used to control the RTC_PLLDIV output. 0: Disable RTC_PLLDIV output. 1: Enable RTC_PLLDIV output. The RTC_PLLDIV output is at IOA[3] or IOA[7], the PMU_IOASEL bit 3 or 7 should also be set to 1 when RTC_PLLDIV output is enabled.	0x0
1:0			Reserved.	0x0

13.6.9. RTC_PWD Register

Table 13-10 Description of RTC_PWD Register

Bit	Name	Type	Description	Default
31:1			Reserved.	0
0	PWDEN	R	This register is used to protect the RTC_CE port's access. Before access the RTC_CE, programmer should	0x0

			write 0x5AA55AA5 to this port, and the PWDEN will be set to 1. This bit will be cleared automatically after any write to RTC_CE port. Which means programmer should write to this port again before next access to RTC_CE port.	

13.6.10. RTC_CE Register

Table 13-11 Description of RTC_CE Register

Bit	Name	Type	Description	Default
31:2			Reserved.	0
1	BSY	R	This flag is used to indicate the RTC update procedure or RTC read procedure is ongoing. This bit will be set immediately after the CE is cleared from 1 to 0 or when RTC_LOAD port is read by CPU. This bit will be cleared automatically after the read or write procedure is done. Programmer can poll this bit to know if the RTC update is done or not. The update or read procedure take around 3 32K period, which is around 100 μS.	0x0
0	CE	R	This register is used to unlock the access to RTC register. This register can be only when PWDEN is set to 1 and 0xA55AA55B is written to this register. After this bit is set to 1, the RTC register can be programmed, but the actual update to RTC core will be start after this bit is cleared to 0. To clear this bit, the PWDEN should be set to 1 and 0xA55AA55A should be written to this register.	0x0

13.6.11. RTC_LOAD Register

Table 13-12 Description of RTC_LOAD Register

Bit	Name	Type	Description	Default
31:0	LOAD	R/W	This register is used to let RTC engine read data from RTC core. When programmer read from this port, the current time will be latched and programmer can read data from RTC_SEC ~ RTC_YEAR register. The read procedure will takes 3 RTCCLK cycles, programmer can check the BSY bit to know if the procedure is done. The read data from this port is invalid.	--

13.6.12. RTC_INTSTS Register

Table 13-13 Description of RTC_INTSTS Register

Bit	Name	Type	Description	Default
31:9			Reserved.	0
8	INTSTS8	R/C	Interrupt status 8, this interrupt will be set when an illegal write to CE register is happened. The illegal write means the BSY bit is still 1 but CE is set to 1 again or RTC_LOAD port is read again. Write 1 to clear this bit.	
7			Reserved.	0x0
6	INTSTS6	R/C	Interrupt status 6, this interrupt will be set when 32K counter interrupt period set by WKUCNT is reach. Write 1 to clear this bit.	0x0
5	INTSTS5	R/C	Interrupt status 5, this interrupt will be set when mid-night (00:00) is reach. Write 1 to clear this bit.	0x0
4	INTSTS4	R/C	Interrupt status 4, this interrupt will be set when multi-hour interrupt period set by WKUHOUR is reach. Write 1 to clear this bit.	0x0
3	INTSTS3	R/C	Interrupt status 3, this interrupt will be set when multi-minute interrupt period set by WKUMIN is reach. Write 1 to clear this bit.	0x0
2	INTSTS2	R/C	Interrupt status 2, this interrupt will be set when multi-second interrupt period set by WKUSEC is reach. Write 1 to clear this bit.	0x0
1	INTSTS1	R/C	Interrupt status 1, this interrupt will be set when illegal time format is written into RTC core. Write 1 to clear this bit.	0x0
0			Reserved.	0

13.6.13. RTC_INTEN Register

Table 13-14 Description of RTC_INTEN Register

Bit	Name	Type	Description	Default
31:9			Reserved.	0
8	INTEN8	R/W	Interrupt enable 8, when this bit is 1 and INTSTS8 is set, and interrupt will be asserted to CPU.	0x0
7			Reserved.	

6	INTEN6	R/W	Interrupt enable 6, when this bit is 1, the INTSTS6 interrupt will be asserted to CPU and wake-up signal will be asserted to PMU controller.	0x0
5	INTEN5	R/W	Interrupt enable 5, when this bit is 1, the INTSTS5 interrupt will be asserted to CPU and wake-up signal will be asserted to PMU controller.	0x0
4	INTEN4	R/W	Interrupt enable 4, when this bit is 1, the INTSTS3 interrupt will be asserted to CPU and wake-up signal will be asserted to PMU controller.	0x0
3	INTEN3	R/W	Interrupt enable 3, when this bit is 1, the INTSTS3 interrupt will be asserted to CPU and wake-up signal will be asserted to PMU controller.	0x0
2	INTEN2	R/W	Interrupt enable 2, when this bit is 1, the INTSTS2 interrupt will be asserted to CPU and wake-up signal will be asserted to PMU controller.	0x0
1	INTEN1	R/W	Interrupt enable 1, when this bit is 1, the INTSTS1 interrupt will be asserted to CPU and wake-up signal will be asserted to PMU controller.	0x0
0			Reserved.	0

13.6.14. RTC_PSCA Register

Table 13-15 Description of RTC_PSCA Register

Bit	Name	Type	Description	Default
31:2			Reserved.	0
1:0	PSCA	R/W	This register is used to control the RTCCLK pre-scaler. When slow down the RTCCLK, it can significantly reduce the power under sleep or deep-sleep mode. 0: No pre-scaler, RTC clock is 32768 Hz. 1: 1/4 pre-scaler, RTC clock is 8192 Hz. 2~3: Reserved. When this register is set, all modules which is using RTCCLK will be affected. The RTC time counter and LCD frame rate will be automatically adjusted by hardware, so no need to modify the setting. But the RTC_WKUCNT's input clock will be changed, so programmer should modify the corresponded setting. And the UART 32K baud rate register need to be re-calculated according to new RTCCLK speed.	0x0

13.6.15. RTC_ACTI Register

Table 13-16 Description of RTC_ACTI Register

Bit	Name	Type	Description	Default
31:16			Reserved.	0
15:0	ACTI	R/W	This register is used to store the Ti value which is used as the center temperature during calibration. This register is 8 bits integer and 8 bits fraction value. This register can be updated only when CE is 1. For example, 0x1880 means 24.5 degree (24.5*256=6272=0x1880), 0xE780 means -24.5 degree(~0x1880+1=0xE780).	0x1800

13.6.16. RTC_ACF200 Register

Table 13-17 Description of RTC_ACF200 Register

Bit	Name	Type	Description	Default
31:26			Reserved.	0
25:0	F200	R/W	This register is used to store the current PCLK speed value which is used for the calculation of PLLDIV value. This register is 26 bits integer. For example, when current PCLK speed is 6.5536MHz, then programmer should fill 6553600/2 = 0x320000 into this register. At the same time, the P6 should also be changed according to the following equation. P6 = 0.0004096 * F200. This register can be updated only when CE is 1.	0x640000

13.6.17. RTC_ACPx Register

Table 13-18 Description of RTC_ACPx Register

Bit	Name	Type	Description	Default
31:0	P0~P7	R/W	Only P2 is 32 bits signed value, other P0~P7 is 16 bits signed value. P3 is read only and will be updated automatically according to calculated temperature. These registers can be updated only when CE is 1. The P0~P7 (exclude P3) will be updated automatically when power-up or wake-up from deep-sleep mode. Please refer to FLASH control section for detail.	0x0000

13.6.18. RTC_ACKx Register

Table 13-19 Description of RTC_ACKx Register

Bit	Name	Type	Description	Default
31:16			Reserved.	0
15:0	K1~K5	R/W	The K1~K5 registers are 16 bits signed register. Hardware will auto select a suitable Kx according to calculated temperature T and update to RTC_ACP3 register. K1: T< KTEMP1. K2: KTEMP1≤T< KTEMP2. K3: KTEMP2≤T< KTEMP3. K4: KTEMP3≤T< KTEMP4. K5: T≥KTEMP4. These registers can be updated only when CE is 1.	0x0000

13.6.19. RTC_ACKTEMP Register

Table 13-20 Description of RTC_ACKTEMP Register

Bit	Name	Type	Description	Default
31:24	KTEMP4	R/W	This register is used to control the section 4 temperature. This is a signed 8 bits value. This register can be updated only when CE is 1.	0x3C
23:16	KTEMP3	R/W	This register is used to control the section 3 temperature. This is a signed 8 bits value. This register can be updated only when CE is 1.	0x28
15:8	KTEMP2	R/W	This register is used to control the section 2 temperature. This is a signed 8 bits value. This register can be updated only when CE is 1.	0x00
7:0	KTEMP1	R/W	This register is used to control the section 1 temperature. This is a signed 8 bits value. This register can be updated only when CE is 1.	0xEC

13.6.20. RTC_WKUCNTR Register

Table 13-21 Description of RTC_WKUCNTR Register

`	Name	Type	Description	Default
31:24			Reserved.	0
23:0	WKUCNTR	R	This register is used to represent the current WKUCNT value. WKUCNTR increases from 0 to WKUCNT. Accumulating from 0, after reaching the WKUCNT setting value, continue to accumulate from 0 again.	--

13.7. Info information register（Related to RTC-Cal）

The RTC calibration data is stored in Info Sector 4 (0x40800). The address 0x40800 ~ 0x409FF data is written by SP606 tool (offline download and RTC calibration). Other data is written before leaving factory. The following table shows the details of this information.

Info Sector data can only be read and cannot be written. All information has a backup. The first data in the form is expressed in 1, and second copies in 2. Each data has a checksum data. Checksum algorithm: add up each data, and reverse the result.

Table 13-22 Info Information Register (Related to RTC-Cal)

Address	Sign	Data	Description
0x00040800	P4	RTC normal temperature offset 1	Load low 16 bits to RTC_ACP4 register, such as 0. unit(0.1ppm),
0x00040804		Check sum 1	INV(SUM(0x40800,0x40800))
0x00040808	P4	RTC normal temperature offset 2	Load low 16 bits to RTC_ACP4 register, such as 0. unit(0.1ppm),
0x0004080C		Check sum 2	INV(SUM(0x40808,0x40808))
0x00040810	K1	Crystal secondary calibration coefficient K1 1	Load to RTC_ACK1 register. K1 is calculated as follows: K1=B1/1000000*65536, B1 is the segment factor of crystal oscillator' quadratic curve. For example, the value of K1 is 20827.
0x00040814	K2	Crystal secondary calibration coefficient K2 1	Load to RTC_ACK2 register. K2 is calculated as follows: K2=B2/1000000*65536, B2 is the segment factor of crystal oscillator' quadratic curve. For example, the value of K2 is 21496.
0x00040818	K3	Crystal secondary calibration coefficient K3 1	Load to RTC_ACK3 register. K3 is calculated as follows: K3=B3/1000000*65536, B3 is the segment factor of crystal oscillator' quadratic curve. For example, the value of K3 is 22020.
0x0004081C	K4	Crystal secondary calibration coefficient K4 1	Load to RTC_ACK4 register. K4 is calculated as follows: K4=B4/1000000*65536, B4 is the segment factor of crystal oscillator' quadratic curve. For example, the value of K4 is 24517.

0x00040820	K5	Crystal secondary calibration coefficient K5 1	Load to RTC_ACK5 register. K5 is calculated as follows: K5=B5/1000000*65536, B5 is the segment factor of crystal oscillator' quadratic curve. For example, the value of K5 is 25257.
0x00040824		Check sum 1	INV(SUM(0x40810, 0x40820))
0x00040828	K1	Crystal secondary calibration coefficient K1 2	Load to RTC_ACK1 register. K1 is calculated as follows: K1=B1/1000000*65536, B1 is the segment factor of crystal oscillator' quadratic curve. For example, the value of K1 is 20827.
0x0004082C	K2	Crystal secondary calibration coefficient K2 2	Load to RTC_ACK2 register. K2 is calculated as follows: K2=B2/1000000*65536, B2 is the segment factor of crystal oscillator' quadratic curve. For example, the value of K2 is 21496.
0x00040830	K3	Crystal secondary calibration coefficient K3 2	Load to RTC_ACK3 register. K3 is calculated as follows: K3=B3/1000000*65536, B3 is the segment factor of crystal oscillator' quadratic curve. For example, the value of K3 is 22020.
0x00040834	K4	Crystal secondary calibration coefficient K4 2	Load to RTC_ACK4 register. K4 is calculated as follows: K4=B4/1000000*65536, B4 is the segment factor of crystal oscillator' quadratic curve. For example, the value of K4 is 24517.
0x00040838	K5	Crystal secondary calibration coefficient K5 2	Load to RTC_ACK5 register. K5 is calculated as follows: K5=B5/1000000*65536, B5 is the segment factor of crystal oscillator' quadratic curve. For example, the value of K5 is 25257.
0x0004083C		Check sum 2	INV(SUM(0x40828, 0x40838))
0x00040840	ACTI	Fixed point temperature of crystal 1	Load to RTC_ACTI register, such as 0x1800
0x00040844		Check sum 1	INV(SUM(0x40840,0x40840))
0x00040848	ACTI	Fixed point temperature of crystal 2	Load to RTC_ACTI register, such as 0x1800
0x0004084C		Check sum 2	INV(SUM(0x40848,0x40848))
0x00040850	KTEMPx(x=4~1)	Temperature section division settings 1	Load to RTC_ACKTEMP register, such as 0x3C2800EC
0x00040854		Check sum 1	INV(SUM(0x40850,0x40850))
0x00040858	KTEMPx(x=4~1)	Temperature section division settings 2	Load to RTC_ACKTEMP register, such as 0x3C2800EC
0x0004085C		Check sum 2	INV(SUM(0x40858,0x40858))

0x00040D00	P1/P0	RTC_ACP1/0 set 1	Load the high 16 bits to RTC_ACP1 register, such as 1060; Load the low 16 bits to RTC_ACP0, such as -214.
0x00040D04	P2′	RTC_ACP2 set 1	The value in this register is recorded as P2′, such as -19746971. According to the formula P2=P2′+(Tr-Tm)*256 to calculate P2, and load P2 to RTC_ACP2 register.
0x00040D08	P5	RTC_ACP5 set 1	Load the high 16 bits to RTC_ACP5 register, such as 6444, and the low 16 bits be abandon.
0x00040D0C	P7/P6′	RTC_ACP 7/6 set 1	Load the high 16 bits to RTC_ACP7 register, such as 0; Load the low 16 bits to P6′ register, such as 1342. According to the formula: P6=a*P6′ to calculate P6, where a=PCLK/6553600.
0x00040D10		Check Sum set 1	INV(SUM(0x40DE0, 0x40DEC))
0x00040D14	P1/P0	RTC_ACP1/0 set 2	Load the high 16 bits to RTC_ACP1 register, such as 1060; Load the low 16 bits to RTC_ACP0, such as -214.
0x00040D18	P2′	RTC_ACP2 set 2	The value in this register is recorded as P2′, such as -19746971. According to the formula P2=P2′+(Tr-Tm)*256 to calculate P2, and load P2 to RTC_ACP2 register.
0x00040D1C	P5	RTC_ACP5 set 2	Load the high 16 bits to RTC_ACP5 register, such as 6444, and the low 16 bits be abandon.
0x00040D20	P7/P6′	RTC_ACP 7/6 set 2	Load the high 16 bits to RTC_ACP7 register, such as 0; Load the low 16 bits to P6′ register, such as 1342. According to the formula: P6=a*P6′ to calculate P6, where a=PCLK/6553600.
0x00040D24		Check Sum set 2	INV(SUM(0x40DF4, 0x40E00))
0x00040D70	Tr	Real Temperature 1 (from tmp275)	According to the formula P2=P2′+(Tr-Tm)*256 to calculate P2, and load P2 to RTC_ACP2 register.
0x00040D74	Tm	Measure Temperature 1 (from ADC)	
0x00040D78		Temp Check sum 1	INV(SUM(0x40D70, 0x40D74))
0x00040D7C	Tr	Real Temperature 2 (from tmp275)	According to the formula P2=P2′+(Tr-Tm)*256 to calculate P2, and load P2 to RTC_ACP2 register.
0x00040D80	Tm	Measure Temperature 2	

		(from ADC)	
0x00040D84		Temp Check sum 2	INV(SUM(0x40D7C, 0x40D80))

13.8. Application Note

13.8.1. Temperature Calibration

User can calculate temperature T according to the following formula, and T is 256 times larger than the actual temperature.

$$T = \left(\left(P0 * \left(\left(X * X\right) >> 16\right)\right) + P1 * X + P2\right) >> 8$$

Where X is ADC sampling data, and X is 16 bits complement.

The P0~P2 is the value in RTC_ACP0~RTC_ACP2 registers, and P0~P2 is used to doing the temperature calibration.

The actual temperature is calculated as following.

$$T' = T / 256$$

13.8.2. Frequency Error Calibration

（1） User can calculate the frequency error of the chip as follows:

$$Delta = \left(P3 * \left(\left(T - Ti\right)^2 >> 16\right)\right) >> 16 + P4$$

Where *Delta* is the error rate in 0.1ppm unit of frequency deviation of 32768.

T = Actual temperature of the chip.

Ti= Setting value in RTC_ACTI register, which is the center temperature of the crystal during RTC calibration.

P4= The crystal deviation in normal temperature.

P3 is the K coefficient of the crystal for the current temperature. When RTC manual temperature compensation, users need to manually match Kx (x = 1 ~ 5) according to the calculated temperature T, and carry out frequency correction according to Kx. There is no need to store values to RTC_ ACP3 register.

（2） User can calculate the frequency correction value as follows:

$$RTC_CAL = \left(Delta * P5\right) >> 16$$

P5 is the value in RTC_ACP5 register, or user can calculate *P5* as follows:

$P5 = 65536 / 10 / (1 / 30 / 32768 / \text{RTCCLK prescaler})$, and $(1 / 30 / 32768 / \text{RTCCLK prescaler})$ is PPM resolution of the RTC_CAL register.

（3） User can calculate the PLL frequency division to output second pulse as follows:

$$RTC_DIV = PCLK / 2 - (Delta * P6) >> 12 - 1$$

Where *P6* is the value in RTC_ACP6 register, or user can calculate *P6* as follows:

$$P6 = PCLK * 2.048 * 10^{-4}$$

13.8.3. RTC Manual Temperature Compensation

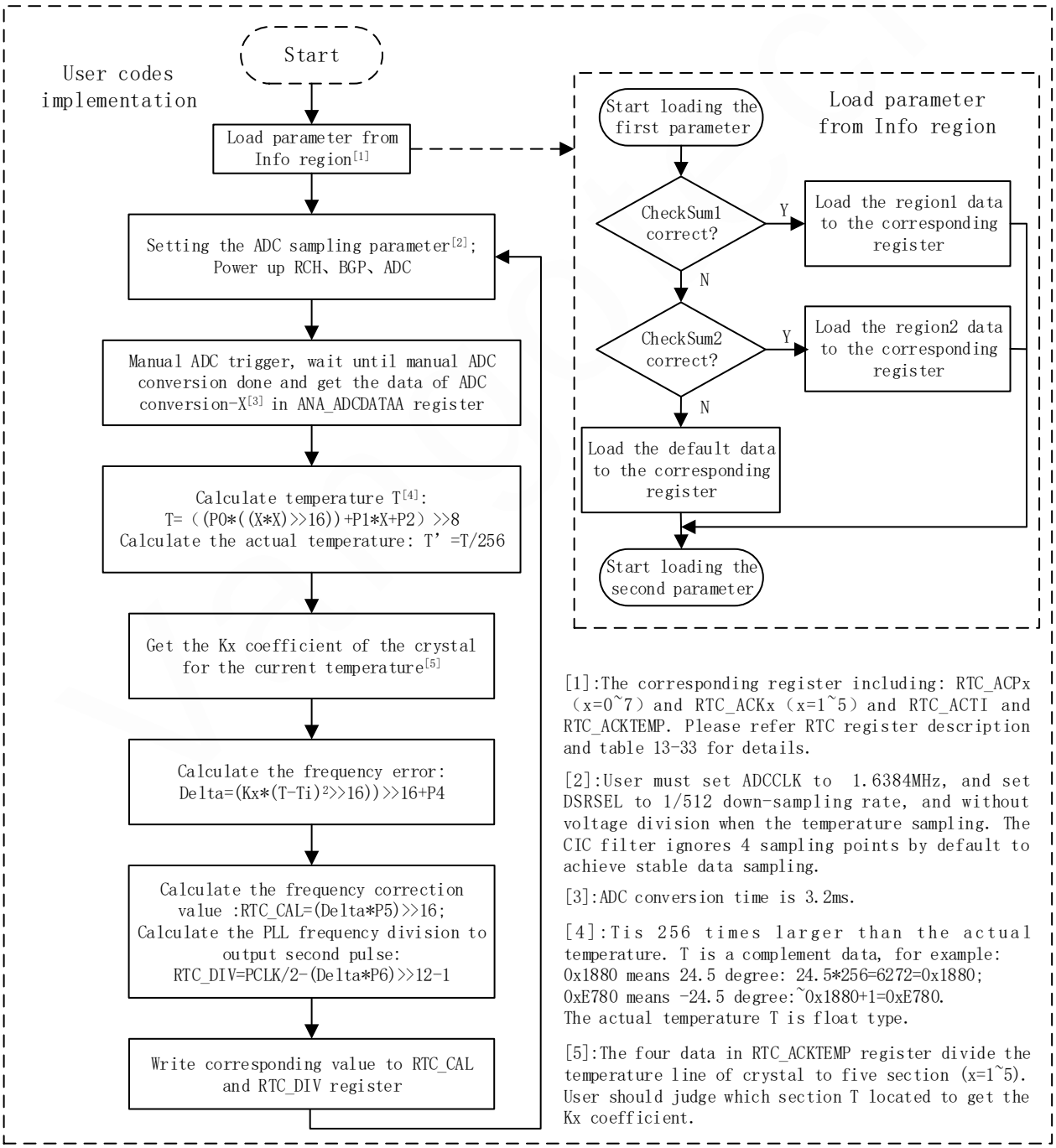

Figure 13-2 RTC Manual Temperature Compensation Flow Chart

vangotech

14. FLASH Controller

14.1. Introduction

The FLASH controller is used to controller the read/write program of embedded FLASH. It supports byte/half-word/word program and sector/chip erase. Programmable timing can be controlled by 1USCYCLE in MISC controller. It will automatically gate the external master access when FLASH is not ready, and always provide correct data with correct access timing. The setting in FLASH controller will be reset after wake-up from sleep or deep-sleep mode, programmer should restore the setting manually after wake-up from these two states.

14.2. Feature

--Support byte/half-word/word programming.

--Support sector/chip erase.

--Support standby mode. When MCU does not access flash, flash automatically enters standby mode. Any access to flash will wake the flash from standby with a wake-up time of 0.

--Support deep-standby mode. When MCU enters sleep mode or deep-standby mode, flash automatically enters deep-standby mode. At the same time, support the manual access to the deep-standby mode by configuration of flash FLASH_DSTB register. Any access to flash will cause flash to wake up from deep-standby with a wake-up time of 10*1ustick.

--Support automatically gate external master when FLASH is not ready.

--Support Info sector read.

--Support FLASH configuration register read/write.

--Programmable program speed.

--Support background checksum function and interrupt.

14.3. Block Diagram

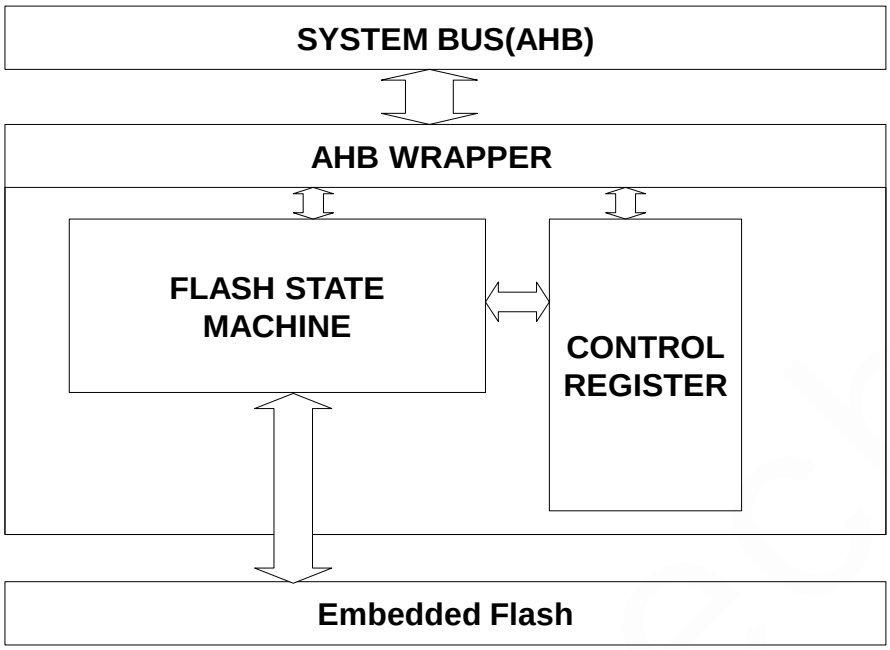

Figure 14-1 Functional Block Diagram of FLASH Controller

14.4. Register Location

Table 14-1 Register Location of FLASH Controller (FLASH Controller Base: 0x00000000)

Name	Type	Address	Description	Default
FLASH_STS	R	0xFFFBC	FLASH programming status register	0x00
FLASH_INT	R/C	0xFFFCC	FLASH Checksum interrupt status	0x0
FLASH_CSSADDR	R/W	0xFFFD0	FLASH Checksum start address	0x00000
FLASH_CSEADDR	R/W	0xFFFD4	FLASH Checksum end address	0x3FFFC
FLASH_CSVALUE	R	0xFFFD8	FLASH Checksum value register	--
FLASH_CSCVALUE	R/W	0xFFFDC	FLASH Checksum compare value register	0x00000000
FLASH_PASS	R/W	0xFFFE0	FLASH password register	0x00000000
FLASH_CTRL	R/W	0xFFFE4	FLASH control register	0x0
FLASH_PGADDR	R/W	0xFFFE8	FLASH program address register	0x00000
FLASH_PGDATA	R/W	0xFFFEC	FLASH program word data register	--
FLASH_PGB0	R/W	0xFFFEC	FLASH program byte data register 0	--
FLASH_PGB1	R/W	0xFFFED	FLASH program byte data register 1	--

FLASH_PGB2	R/W	0xFFFEE	FLASH program byte data register 2	--
FLASH_PGB3	R/W	0xFFFEF	FLASH program byte data register 3	--
FLASH_PGHW0	R/W	0xFFFEC	FLASH program half-word data register 0	--
FLASH_PGHW1	R/W	0xFFFEE	FLASH program half-word data register 1	--
FLASH_SERASE	R/W	0xFFFF4	FLASH sector erase control register	0x00000000
FLASH_CERASE	R/W	0xFFFF8	FLASH chip erase control register	0x00000000
FLASH_DSTB	R/W	0xFFFFC	FLASH deep standby control register	0x00000000

Table 14-2 Register Location of MISC2 Controller for FLASH (MISC2 Base: 0x40013E00)

Name	Type	Address	Description	Default
MISC2_FLASHWC	R/W	0x0000	FLASH wait cycle register	0x2100

14.5. Register Definition

14.5.1. FLASH_PASS Register

Table 14-3 Description of FLASH_PASS Register

Bit	Name	Type	Description	Default
31:1	-	-	Reserved.	0
0	UNLOCK	R	The UNLOCK bit is used to indicate the FLASH program has been unlocked or not. To set this bit, programmer should write 0x55AAAA55 to this register. This bit will be kept high until programmer write any other value to this register. If the UNLOCK bit is 0, all FLASH program or erase or write configuration action will be disabled.	0x0

14.5.2. FLASH_CTRL Register

Table 14-4 Description of FLASH_CTRL Register

Bit	Name	Type	Description	Default
31:4			Reserved.	0
2	CSINTEN	R/W	This register is used to control the interrupt enable of checksum error. 0: Disable checksum error interrupt. 1: Enable checksum error interrupt.	0x0

1:0	CSMODE	R/W	This register is used to control the checksum mode. 0: Disable checksum function. 1: Always-on checksum mode 2: Checksum start at overflow of timer 2. 3: Checksum start at rising edge of RTC second pulse.	0x0

14.5.3. FLASH_PGADDR Register

Table 14-5 Description of FLASH_PGADDR Register

Bit	Name	Type	Description	Default
31:18			Reserved.	0
17:0	PGADDR	R/W	This register is used to control the program address before doing program. This is byte address of FLASH IP, please refer to table 14-6 for detail about address under each mode. This address will increment automatically when a successful program is done.	0x000000

Table 14-6 Description of PGADDR and Write Data Port under Different Mode

Mode	PGADDR[17:2]	PGADDR[1:0]	Write Data Port
Normal Word Program	0x0000~0xFFFF	0	FLASH_PGDATA
Normal Byte Program	0x0000~0xFFFF	0	FLASH_PGB0
		1	FLASH_PGB1
		2	FLASH_PGB2
		3	FLASH_PGB3
Normal Half-Word Program	0x0000~0xFFFF	0	FLASH_PGHW0
		2	FLASH_PGHW1
Sector Erase	0x0000~0xFFFF	0	FLASH_SERASE

14.5.4. FLASH_PGDATA Register

Table 14-7 Description of FLASH_PGDATA Register

Bit	Name	Type	Description	Default
31:0	PGDATA	R/W	This register is used to control the program data. When UNLOCK is 1, write to this register will trigger a 4 bytes program automatically. Any access to FLASH IP during	

			this period will be gated until the program is done. A two 32 bits FIFO is inside the FLASH controller, so programmer can do continuous program without interrupt. But if programmer needs to access FLASH IP, like execute program, during this period the FLASH program speed will become slower since more setup time is required for FLASH IP. It is suggested to put your programming program in SRAM, then the maximum program speed can be achieved. It is a must to do word write to this register to trigger a 4 bytes program, byte or half-word write will result-in single byte or two-bytes program.	

14.5.5. FLASH_PGBx Register

Table 14-8 Description of FLASH_PGBx Register

Bit	Name	Type	Description	Default
7:0	PGBx	R/W	This register is used to control the program data. When UNLOCK is 1, write to this register will trigger one-byte program automatically. Any access to FLASH IP during this period will be gated until the program is done. A two 8 bits FIFO is inside the FLASH controller, so programmer can do continuous program without interrupt. But if programmer needs to access FLASH IP, like execute program, during this period the FLASH program speed will become slower since more setup time is required for FLASH IP. It is suggested to put your programming program in SRAM, then the maximum program speed can be achieved. It is a must to do byte write to this register to trigger a single byte program, word or half-word write will result-in 4 bytes or two-bytes program.	

14.5.6. FLASH_PGHWx Register

Table 14-9 Description of FLASH_PGHWx Register

Bit	Name	Type	Description	Default

15:0	PGHWx	R/W	This register is used to control the program data. When UNLOCK is 1, write to this register will trigger a 2 bytes program automatically. Any access to FLASH IP during this period will be gated until the program is done. A two 16 bits FIFO is inside the FLASH controller, so programmer can do continuous program without interrupt. But if programmer needs to access FLASH IP, like execute program, during this period the FLASH program speed will become slower since more setup time is required for FLASH IP. It is suggested to put your programming program in SRAM, then the maximum program speed can be achieved. It is a must to do half-word write to this register to trigger a 2 bytes program, byte or word write will result-in single byte or 4-bytes program.	

14.5.7. FLASH_SERASE Register

Table 14-10 Description of FLASH_SERASE Register

Bit	Name	Type	Description	Default
31:1			Reserved.	0
0	SERASE	R	This bit is used to indicate if the sector erase is ongoing or not. This bit can be set when UNLOCK is 1 and programmer write 0xAA5555AA to this register, and it will be cleared automatically after the sector erase is done. The address of sector erase is controlled by PGADDR[17:2]. The sector erase time is 4000* 1us tick. One sector is 512 byte.	0x0

14.5.8. FLASH_CERASE Register

Table 14-11 Description of FLASH_CERASE Register

Bit	Name	Type	Description	Default
31:1			Reserved.	0
0	CERASE	R	This bit is used to indicate if the chip erase is ongoing or not. This bit can be set when UNLOCK is 1 and programmer write 0xAA5555AA to this register, and it will be cleared automatically after the chip erase is done. The chip erase time is 30000* 1us tick.	0x0

14.5.9. FLASH_DSTB Register

Table 14-12 Description of FLASH_DSTB Register

Bit	Name	Type	Description	Default
31:1	-	-	Reserved.	0
0	DSTB	R	This bit is used to indicate if the FLASH IP is entering deep standby. This bit can be set when UNLOCK is 1 and programmer write 0xAA5555AA to this register, and it will be cleared automatically after the FLASH IP wake-up from deep-standby mode. The deep standby mode can exit by any access to FLASH IP, but a 10 μS tick is required for the FLASH IP to back to normal state. During this period, the any access to FLASH will be gated until FLASH is ready.	0x0

14.5.10. FLASH_INT Register

Table 14-13 Description of FLASH_INT Register

Bit	Name	Type	Description	Default
31:1	-	-	Reserved.	0
0	CSERR	R/C	Checksum error status bit. This flag is used to indicate the previous checksum operation has error, which means compare fail from CSVALUE to CSCVALUE. When CSINTEN is 1, an interrupt will be asserted to CPU. Write 1 to clear this flag.	0x0

14.5.11. FLASH_CSSADDR Register

Table 14-14 Description of FLASH_CSSADDR Register

Bit	Name	Type	Description	Default
31:18			Reserved.	0
17:0	CSSADDR	R/W	Checksum start address register. This register is used to control the start address of checksum. The value in this register is byte address, but the LSB 2 bits are always 0.	0x00000

14.5.12. FLASH_CSEADDR Register

Table 14-15 Description of FLASH_CSEADDR Register

Bit	Name	Type	Description	Default
31:18			Reserved.	0
17:0	CSEADDR	R/W	Checksum end address register. This register is used to control the end address of checksum. The value in this register is byte address, but the LSB 2 bits are always 0. The checksum range is (CSSADDR =< ADDR =< CSSADDR).	0x3FFFC

14.5.13. FLASH_CSVALUE Register

Table 14-16 Description of FLASH_CSVALUE Register

Bit	Name	Type	Description	Default
31:0	CSVALUE	R	Checksum latched value register. This register is used to represent the checksum result of previous checksum operation.	0x00000000

14.5.14. FLASH_CSCVALUE Register

Table 14-17 Description of FLASH_CSCVALUE Register

Bit	Name	Type	Description	Default
31:0	CSCVALUE	R/W	Checksum compare value register. This register is used to store the expected checksum result. When the checksum is done but the calculated checksum value doesn't match CSCVALUE, the CSERR flag will be set. Calculating method of checksum compare value: accumulate all the values in this range (CSSADDR =< ADDR=< CSEADDR). The cumulative result is valid for 32 bits of data.	0x00000000

14.5.15. FLASH_STS Register

Table 14-18 Description of FLASH_STS Register

Bit	Name	Type	Description	Default
31:5			Reserved.	0

4:0	STS	R	FLASH controller status register. 1: FLASH operation is done. Others: FLASH controller is in busy state or idle state. Programmer can poll this register to ensure all FLASH operation is done before disabling the FLASH_PASS register.	0x0

14.5.16. MISC2_FLASHWC Register

Table 14-19 Description of MISC2_FLASHWC Register

Bit	Name	Type	Description	Default
31:14			Reserved.	0
13:8	1USCYCLE	R/W	This register is used for FLASH controller to calculate 1ustick from AHB clock 1ustick = (AHB clock period)*(1USCYCLE+1) This setting is related to the wake-up time of FLASH, and the programming time of FLASH. FLASH wake-up time =1ustick *10. It must meet 1ustick >=1 μs. For example, the clock frequency of AHB is 26.2144MHz. In order to ensure the minimum wake-up time, 1USCYCLE should be set to 26. So, the wake-up time of FLASH is 27 / 26214400 * 10, which is about 10 μs. For example, the clock frequency of AHB is 32.768KHz. In order to ensure the minimum wake-up time, 1USCYCLE should be set to 0. So, the wake-up time of FLASH is 1 / 32768 * 10, which is about 305 μs.	0x21
7:0			Reserved.	0

15. GPIO Controller

15.1. Introduction

There total 82 IOs in V94XX and 16 IOs (GPIOA) are controlled by PMU controller with wake-up function. Other IOs (GPIOB~GPIOF) are controlled by GPIO controller which will lose its state at deep sleep mode, but keep their state at sleep mode, programmer should restore the setting manually after wake-up from deep-sleep mode.

15.2. Feature

--Each IO can be input or output mode.

--Each IO can be open drain mode.

--All pins have no pull-up and pull-down.

--GPIOA can wake up Sleep mode and Deep-sleep mode.

15.3. Block Diagram

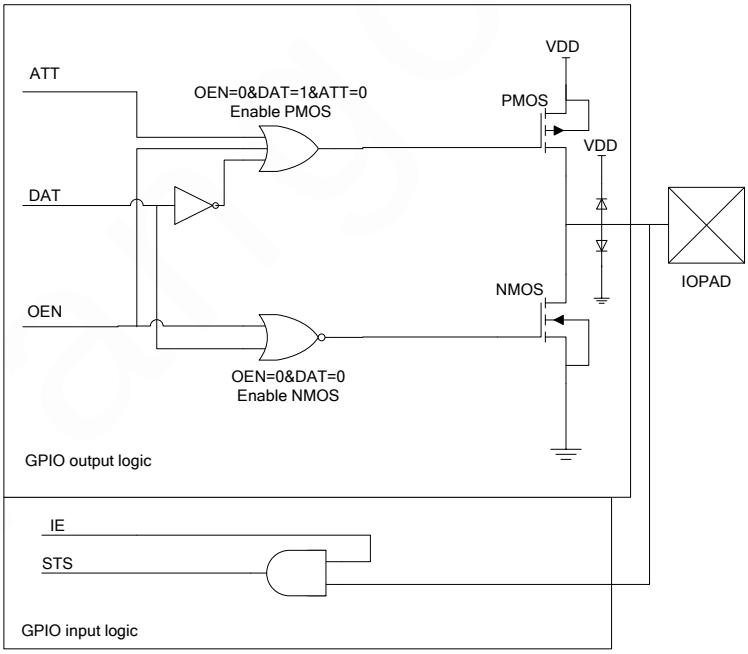

Figure 15-1 Functional Block Diagram of GPIO Controller

15.4. Register Location

Table 15-1 Register Location of the PMU_IOA Controller for GPIO(PMU Base: 0x40014000)

Name	Type	Address	Description	Default

PMU_IOAOEN	R/W	0x0010	IOA output enable register	0xFFFF
PMU_IOAIE	R/W	0x0014	IOA input enable register	0xFFFF
PMU_IOADAT	R/W	0x0018	IOA data register	0x0000
PMU_IOAATT	R/W	0x001C	IOA attribute register	0x0000
PMU_IOAWKUEN	R/W	0x0020	IOA wake-up enable register	0x00000000
PMU_IOASTS	R	0x0024	IOA input status register	--
PMU_IOAINTSTS	R/C	0x0028	IOA interrupt status register	0x0000
PMU_IOASEL	R/W	0x0038	IOA special function select register	0x0000
PMU_IOANODEG	R/W	0x0050	IOA no-deglitch control register.	0x0000

Table 15-2 Register Location of GPIO Controller (GPIO Base: 0x40000000)

Name	Type	Address	Description	Default
IOB_OEN	R/W	0x0020	IOB output enable register	0xFFFF
IOB_IE	R/W	0x0024	IOB input enable register	0xFFFF
IOB_DAT	R/W	0x0028	IOB data register	0x0000
IOB_ATT	R/W	0x002C	IOB attribute register	0x0000
IOB_STS	R	0x0030	IOB input status register	--
IOC_OEN	R/W	0x0040	IOC output enable register	0xFFFF
IOC_IE	R/W	0x0044	IOC input enable register	0xFFFF
IOC_DAT	R/W	0x0048	IOC data register	0x0000
IOC_ATT	R/W	0x004C	IOC attribute register	0x0000
IOC_STS	R	0x0050	IOC input status register	--
IOD_OEN	R/W	0x0060	IOD output enable register	0xFFFF
IOD_IE	R/W	0x0064	IOD input enable register	0xFFFF
IOD_DAT	R/W	0x0068	IOD data register	0x0000
IOD_ATT	R/W	0x006C	IOD attribute register	0x0000
IOD_STS	R	0x0070	IOD input status register	--
IOE_OEN	R/W	0x0080	IOE output enable register	0xFFFF
IOE_IE	R/W	0x0084	IOE input enable register	0xFFFF
IOE_DAT	R/W	0x0088	IOE data register	0x0000
IOE_ATT	R/W	0x008C	IOE attribute register	0x0000
IOE_STS	R	0x0090	IOE input status register	--

IOF_OEN	R/W	0x00A0	IOF output enable register	0x3
IOF_IE	R/W	0x00A4	IOF input enable register	0x3
IOF_DAT	R/W	0x00A8	IOF data register	0x0
IOF_ATT	R/W	0x00AC	IOF attribute register	0x0
IOF_STS	R	0x00B0	IOF input status register	--
IOB_SEL	R/W	0x00C0	IOB special function select register	0x00
IOE_SEL	R/W	0x00CC	IOE special function select register	0x00
IO_MISC	R/W	0x00E0	IO misc. control register	0x00

15.5. Register Definition

15.5.1. PMU_IOAOEN Register

Table 15-3 Description of PMU_IOAOEN Register

Bit	Name	Type	Description	Default
31:16	-	-	Reserved.	0
15:0	IOAOEN	R/W	Each bit controls the IOA's output enable signal, referred to Table 15-7 for detail of IO state. 0: Enable IO's output function. 1: Disable IO's output function.	0xFFFF

15.5.2. PMU_IOAIE Register

Table 15-4 Description of PMU_IOAIE Register

Bit	Name	Type	Description	Default
31:16			Reserved.	0
15:0	IOAIE	R/W	Each bit controls the IOA's input enable signal, referred to Table 15-7 for detail of IO state. 0: Disable IO's input function. 1: Enable IO's input function.	0xFFFF

15.5.3. PMU_IOADAT Register

Table 15-5 Description of PMU_IOADAT Register

Bit	Name	Type	Description	Default
31:16			Reserved.	0
15:0	IOADAT	R/W	Each bit controls the IOA's output data and pull low/high function, referred to Table 15-7 for detail of IO state.	0x0000

15.5.4. PMU_IOAATT Register

Table 15-6 Description of PMU_IOAATT Register

Bit	Name	Type	Description	Default
31:16			Reserved.	0
15:0	IOAATT	R/W	Each bit controls the IOA's attribute, referred to Table 15-7 for detail of IO state. When an IO is set to output mode (GPIO or special function), this bit is used to control the CMOS or open drain mode of the IO pad. 0: CMOS mode. 1: Open drain mode (disable PMOS output).	0x0000

Table 15-7 IO Status under Different Kind of Setting

IOx Setting			IO Status
IOxOEN	IOxDAT	IOxATT	
1	0	0	Disable output function.
1	1	0	Disable output function.
1	0	1	Disable output function.
1	1	1	Disable output function.
0	0	0	Output low
0	1	0	Output high
0	0	1	Open drain output low.
0	1	1	Open drain pull-high

15.5.5. PMU_IOAWKUEN Register

Table 15-8 Description of PMU_IOAWKUEN Register

Bit	Name	Type	Description	Default
31:0	IOAWKUEN	R/W	Every 2 bits control the IOA's wake up or interrupt enable function. Bit [1:0]: IOA0WKUEN[1：0] Bit [3:2]: IOA1WKUEN[1：0] ..... Bit [31:30]: IOA15WKUEN[1：0] Refer to Table 15-9 for detail of each wake-up mode.	0x00000000

Table 15-9 Description of each IO wake-up mode

IOAyWKUEN[1：0]	IOAyDAT	Wake-up Event
0	X	Disable wake-up function
1	0	Rising edge
	1	Falling Edge
2	0	High Level
	1	Low level
3	X	Rising or falling edge

Which y=0 ... 15, indicating an IO port.

For rising edge or falling edge wake-up source, since the H/W will use the final latch IO status before entering sleep or deep-sleep mode, so the programmer needs to wait until the IO status change back to normal state. For example, when rising edge mode is chosen, the programmer should wait until the IO status back to low state to ensure the rising edge can be detected correctly. For high level or low level source, IO have no debounce in normal interrupt or wake up from sleep or deep sleep mode, but IO have four RTCCLK clock cycles debounce When CPU wake up from sleep or deep sleep mode.

15.5.6. PMU_IOASTS Register

Table 15-10 Description of PMU_IOASTS Register

Bit	Name	Type	Description	Default
31:16	-	-	Reserved.	0
15:0	IOASTS	R	Each bit represents the current IOA's input data value.	

15.5.7. PMU_IOAINTSTS Register

Table 15-11 Description of PMU_IOAINTSTS Register

Bit	Name	Type	Description	Default
31:16	-	-	Reserved.	0
15:0	IOAINTSTS	R/C	Each bit represents the IOA's interrupt status. The corresponded bit will be set to 1 when corresponded wake-up event is detected. This register can be clear to 0 by writing corresponded bit to 1.	0x0000

15.5.8. PMU_IOASEL Register

Table 15-12 Description of PMU_IOASEL Register

Bit	Name	Type	Description	Default
31:8	-	-	Reserved.	0
7	IOA_SEL7	R/W	IOA7 special function select register. 0: GPIO 1: Special function 1 (RTC_PLLDIV).	0x0
6	IOA_SEL6	R/W	IOA6 special function select register. 0: GPIO 1: Special function 2 (CMP2_O).	0x0
5:4	-	-	Reserved.	0
3	IOA_SEL3	R/W	IOA3 special function select register. 0: GPIO 1: Special function 1 (RTC_PLLDIV).	0x0
2:0	-	-	Reserved.	0

15.5.9. PMU_IOANODEG Register

Table 15-13 Description of PMU_IOANODEG Register

Bit	Name	Type	Description	Default
31:16	-	-	Reserved.	0
15:0	IOANODEG	R/W	Each bit control if the IOA wake-up signal will go through de-glitch circuit or not. If set this bit to 1, the corresponded IOA wake-up signal will not go through de-glitch circuit which can have a faster wake-up time. This bit affect the edge wake-up signal under sleep and deep-sleep mode.	0x0000

			0: IOA wake-up signal will go through de-glitch circuit. 1: IOA wake-up signal will not go through de-glitch circuit.	

15.5.10. IOX_OEN Register

Table 15-14 Description of IOX_OEN Register

Bit	Name	Type	Description	Default
31:16	-	-	Reserved.	0
15:0	IOXOEN*	R/W	Each bit control the IOX's output enable signal, referred to Table 15-7 for detail of IO state. 0: Enable IO's output function. 1: Disable IO's output function.	0xFFFF

Note*: The bit6 & bit7 of IOE_OEN should be set to 1.

15.5.11. IOX_IE Register

Table 15-15 Description of IOX_IE Register

Bit	Name	Type	Description	Default
31:16	-	-	Reserved.	0
15:0	IOXIE*	R/W	Each bit control the IOX's input enable signal, referred to Table 15-7 for detail of IO state. 0: Disable IO's input function. 1: Enable IO's input function.	0xFFFF

Note*: The bit6 & bit7 of IOE_IE should be set to 1.

15.5.12. IOX_DAT Register

Table 15-16 Description of IOX_DAT Register

Bit	Name	Type	Description	Default
31:16	-	-	Reserved.	0
15:0	IOXDAT	R/W	Each bit controls the IOX's output data and pull low/high function, referred to Table 15-7 for detail of IO state.	0x0000

15.5.13. IOX_ATT Register

Table 15-17 Description of IOX_ATT Register

Bit	Name	Type	Description	Default
31:16	-	-	Reserved.	0
15:0	IOXATT	R/W	Each bit controls the IOX's attribute, referred to Table 15-7 for detail of IO state. When an IO is configured to a special mode, like UART or SPI, programmer can set the corresponded IOXATT to 1 to let it become open drain mode. Which means when output high, it will become input floating, when output low, it will keep the same output low behavior.	0x0000

15.5.14. IOX_STS Register

Table 15-18 Description of IOX_STS Register

Bit	Name	Type	Description	Default
31:16	-	-	Reserved.	0
15:0	IOXSTS	R	Each bit represents the current IOX's input data value.	--

15.5.15. IOB_SEL Register

Table 15-19 Description of IOB_SEL Register

Bit	Name	Type	Description	Default
31:7	-	-	Reserved.	0
6	IOB_SEL6	R/W	IOB6 special function select register 0: GPIO or special function 1/2 1: Special function 3(RTCCLK) when special function 1/2 is not enabled.	0x0
5:3	-	-	Reserved.	0
2	IOB_SEL2	R/W	IOB2 special function select register 0: GPIO or special function 1/2 1: Special function 3 (PLLL) when special function 1/2 is not enabled.	0x0
1	IOB_SEL1	R/W	IOB1 special function select register	0x0

			0: GPIO or special function 1/2 1: Special function 3 (PLLH divider) when special function 1/2 is not enabled.	
0	-	-	Reserved.	0

15.5.16. IOE_SEL Register

Table 15-20 Description of IOE_SEL Register

Bit	Name	Type	Description	Default
31:8	-	-	Reserved.	0
7	IOE_SEL7	R/W	IOE7 special function select register. 1: Special function 1 (CMP1_O).	0x0
6:0	-	-	Reserved.	0

15.5.17. IO_MISC Register

Table 15-21 Description of IO_MISC Register

Bit	Name	Type	Description	Default
31:6	-	-	Reserved.	0
5	I2CIOC	R/W	This register is used to control the I2C function is at IOB or IOC. 0: I2C is at IOB13~IOB14. 1: I2C is at IOC4~IOC5.	0x0
4:3	-	-	Reserved.	0
2:0	PLLHDIV	R/W	When IOB1 is selected to special function 3, this register is used to control the divide ratio of PLLH's output. 0: /1 1: /2 2: /4 3: /8 4: /16 Others: Reserved.	0x0

15.6. Special Function of IO

15.6.1. Special Function of IOA

The following table shows the special function of IOA, the special function will be turn-on when corresponded module is enabled.

Table 15-22 Special Function of IOA

IO	Special Function 1	Special Function 2	Special Function 3	Special Function 4
IOA0	SWCLK (When MODE is 0)		LCDSEG54	
IOA1	SWDIO (When MODE is 0)		LCDSEG53	
IOA2			LCDSEG52	
IOA3	RTC_PLLDIV		LCDSEG51	
IOA4			LCDSEG66	CMP2_P
IOA5			LCDSEG67	CMP2_N
IOA6	CMP2_O		LCDSEG68	
IOA7	RTC_PLLDIV		LCDSEG69	
IOA8			LCDSEG50	ADC_CH3
IOA9			LCDSEG49	ADC_CH4
IOA10			LCDSEG48	ADC_CH5
IOA11			LCDSEG47	ADC_CH6
IOA12	UART RX0		LCDSEG71	
IOA13	UART RX1	ISO7816 RX0	LCDSEG73	
IOA14	UART RX2		LCDSEG13	
IOA15	UART RX3	ISO7816 RX1	LCDSEG15	

15.6.2. Special Function of IOB

The following table shows the special function of IOB, the special function will be turn-on when corresponded module is enabled. But when special function is LCD COM/SEG or ADC or CMP or X6_5M or VDCIN, programmer should disable GPIO input and disable GPIO output manually and disable other special function on this GPIO to ensure the correctness of these special functions.

Table 15-23 Special function of IOB

IO	Special Function 1	Special Function 2	Special Function 3	Special Function 4
IOB0	UART RX4	PWM0		LCDSEG43
IOB1	UART RX5		PLLH divider	LCDSEG45
IOB2	UART TX0		PLLL	LCDSEG70
IOB3	UART TX1	ISO7816 CLK0		LCDSEG72
IOB4	UART TX2			LCDSEG12
IOB5	UART TX3	ISO7816 CLK1		LCDSEG14
IOB6	UART TX4	PWM1	RTCCLK	LCDSEG44
IOB7	UART TX5			LCDSEG46
IOB8				LCDSEG35
IOB9	SPI1CSN			LCDSEG36
IOB10	SPI1CLK			LCDSEG37
IOB11	SPI1MISO			LCDSEG38
IOB12	SPI1MOSI			LCDSEG39
IOB13	I2CSCL (I2CIOC=0)	PWM2		LCDSEG40
IOB14	I2CSDA (I2CIOC=0)	PWM3		LCDSEG41
IOB15	TIMER EXT CLK			LCDSEG42

15.6.3. Special Function of IOC

The following table shows the special function of IOC, the special function will be turn-on when corresponded module is enabled. But when special function is LCD COM/SEG or ADC or CMP or X6_5M or VDCIN, programmer should disable GPIO input and disable GPIO output manually and disable other special function on this GPIO to ensure the correctness of these special functions.

Table 15-24 Special function of IOC

IO	Special Function 1	Special Function 2	Special Function 3
IOC0	SPI2CSN		LCDSEG16
IOC1	SPI2CLK		LCDSEG17
IOC2	SPI2MISO		LCDSEG18
IOC3	SPI2MOSI		LCDSEG19
IOC4		I2CSCL (I2CIOC=1)	LCDSEG20
IOC5		I2CSDA (I2CIOC=1)	LCDSEG21

IOC6			LCDSEG22
IOC7			LCDSEG23
IOC8			LCDSEG24
IOC9			LCDSEG25
IOC10			LCDSEG26
IOC11			LCDSEG27
IOC12			LCDSEG28
IOC13			LCDSEG29
IOC14			LCDSEG30
IOC15			LCDSEG31

15.6.4. Special Function of IOD

The following table shows the special function of IOD, the special function will be turn-on when corresponded module is enabled. But when special function is LCD COM/SEG or ADC or CMP or X6_5M or VDCIN, programmer should disable GPIO input and disable GPIO output manually and disable other special function on this GPIO to ensure the correctness of these special functions.

Table 15-25 Special function of IOD

IO	Special Function 1	Special Function 2
IOD0	LCDCOM0	
IOD1	LCDCOM1	
IOD2	LCDCOM2	
IOD3	LCDCOM3	
IOD4	LCDCOM4	LCDSEG0
IOD5	LCDCOM5	LCDSEG1
IOD6	LCDCOM6	LCDSEG2
IOD7	LCDCOM7	LCDSEG3
IOD8	LCDSEG4	
IOD9	LCDSEG5	
IOD10	LCDSEG6	
IOD11	LCDSEG7	
IOD12	LCDSEG8	
IOD13	LCDSEG9	

IOD14	LCDSEG10	
IOD15	LCDSEG11	

15.6.5. Special Function of IOE

The following table shows the special function of IOE, the special function will be turn-on when corresponded module is enabled. But when special function is LCD COM/SEG or ADC or CMP or X6_5M or VDCIN, programmer should disable GPIO input and disable GPIO output manually and disable other special function on this GPIO to ensure the correctness of these special functions.

Table 15-26 Special function of IOE

IO	Special Function 1	Special Function 2	Special Function 3
IOE0		LCDSEG74	
IOE1		LCDSEG75	
IOE2		LCDSEG76	
IOE3		LCDSEG77	
IOE4		LCDSEG63	ADC_CH7
IOE5		LCDSEG62	ADC_CH8
IOE6		LCDSEG61	ADC_CH9, Tiny ADC 0
IOE7	CMP1_O	LCDSEG60	ADC_CH11, Tiny ADC 1
IOE8		LCDSEG59	CMP1_P
IOE9		LCDSEG58	CMP1_N
IOE10		LCDSEG32	
IOE11		LCDSEG33	
IOE12		LCDSEG34	
IOE13		LCDSEG55	
IOE14		LCDSEG56	
IOE15		LCDSEG57	

15.6.6. Special Function of IOF

The following table shows the special function of IOF, the special function will be turn-on when corresponded module is enabled. But when special function is LCD COM/SEG or ADC or CMP or X6_5M or VDCIN, programmer should disable GPIO input and disable GPIO output manually and disable other special function on this GPIO to ensure the correctness of these special functions.

Table 15-27 Special function of IOF

IO	Special Function 1
IOF0	X6_5MI
IOF1	X6_5MO

vangotech

16. DMA Controller

16.1. Introduction

The DMA controller is used to transfer data from memory to memory or transfer data from memory to IO or from IO to memory. The DMA controller is also integrated with an AHB to APB bridge, so when DMA is doing APB transfer, the AHB performance will not be affected by slow peripheral. There are total 4 channels integrated in V94XX and each channel's priority is round-robin. The setting in DMA controller will be reset after wake-up from sleep or deep-sleep mode, programmer should restore the setting manually after wake-up from these two states.

16.2. Feature

--Memory to Memory Transfer

--Memory to IO Transfer

--IO to Memory Transfer

--Software mode or Hardware DMA request mode.

--Support Fix, Package Round or Frame Round Address mode

--Support Package/Frame/Data-abort IRQ generation.

--Support detection of data abort on bus.

--Integrated with AHB to APB Bridge.

--Support AES 128/192/256 encode/decode

16.3. Block Diagram

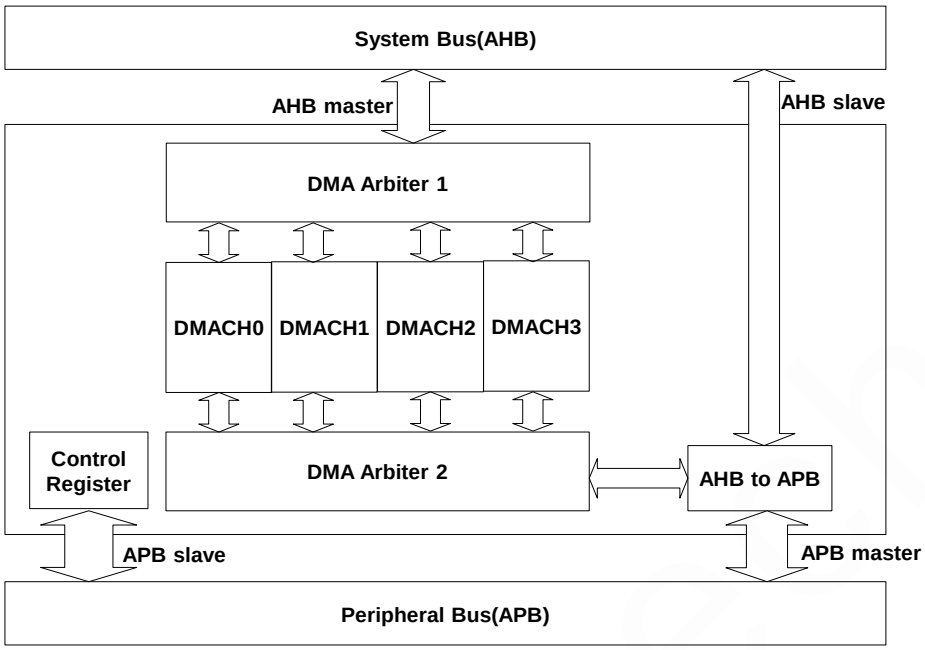

Figure 16-1 Functional Block Diagram of DMA Controller

16.4. Register Location

Table 16-1 Register Location of DMA Controller (DMA Base: 0x40010000)

Name	Type	Address	Description	Default
DMA_IE	R/W	0x0000	DMA interrupt enable register	0x000
DMA_STS	R/W	0x0004	DMA status register	0x0000
DMA_C0CTL	R/W	0x0010	DMA channel 0 control register	0x00000000
DMA_C0SRC	R/W	0x0014	DMA channel 0 source register	0x00000000
DMA_C0DST	R/W	0x0018	DMA channel 0 destination register	0x00000000
DMA_C0LEN	R	0x001C	DMA channel 0 transfer length register	0x0000
DMA_C1CTL	R/W	0x0020	DMA channel 1 control register	0x00000000
DMA_C1SRC	R/W	0x0024	DMA channel 1 source register	0x00000000
DMA_C1DST	R/W	0x0028	DMA channel 1 destination register	0x00000000
DMA_C1LEN	R	0x002C	DMA channel 1 transfer length register	0x0000
DMA_C2CTL	R/W	0x0030	DMA channel 2 control register	0x00000000
DMA_C2SRC	R/W	0x0034	DMA channel 2 source register	0x00000000

DMA_C2DST	R/W	0x0038	DMA channel 2 destination register	0x00000000
DMA_C2LEN	R	0x003C	DMA channel 2 transfer length register	0x0000
DMA_C3CTL	R/W	0x0040	DMA channel 3 control register	0x00000000
DMA_C3SRC	R/W	0x0044	DMA channel 3 source register	0x00000000
DMA_C3DST	R/W	0x0048	DMA channel 3 destination register	0x00000000
DMA_C3LEN	R	0x004C	DMA channel 3 transfer length register	0x0000
DMA_AESCTL	R/W	0x0050	DMA AES control register	0x00000000
DMA_AESKEY0	R/W	0x0060	DMA AES key 0 register	0x00000000
DMA_AESKEY1	R/W	0x0064	DMA AES key 1 register	0x00000000
DMA_AESKEY2	R/W	0x0068	DMA AES key 2 register	0x00000000
DMA_AESKEY3	R/W	0x006C	DMA AES key 3 register	0x00000000
DMA_AESKEY4	R/W	0x0070	DMA AES key 4 register	0x00000000
DMA_AESKEY5	R/W	0x0074	DMA AES key 5 register	0x00000000
DMA_AESKEY6	R/W	0x0078	DMA AES key 6 register	0x00000000
DMA_AESKEY7	R/W	0x007C	DMA AES key 7 register	0x00000000

16.5. Register Definition

16.5.1. DMA_IE Register

Table 16-2 Description of DMA_IE Register

Bit	Name	Type	Description	Default
31:12			Reserved.	0
11	C3DAIE	R/W	Channel 3 data abort interrupt enable 0: Disable 1: Enable	0x0
10	C2DAIE	R/W	Channel 2 data abort interrupt enable 0: Disable 1: Enable	0x0
9	C1DAIE	R/W	Channel 1 data abort interrupt enable 0: Disable 1: Enable	0x0

8	C0DAIE	R/W	Channel 0 data abort interrupt enable 0: Disable 1: Enable	0x0
7	C3FEIE	R/W	Channel 3 frame end interrupt enable 0: Disable 1: Enable	0x0
6	C2FEIE	R/W	Channel 2 frame end interrupt enable 0: Disable 1: Enable	0x0
5	C1FEIE	R/W	Channel 1 frame end interrupt enable 0: Disable 1: Enable	0x0
4	C0FEIE	R/W	Channel 0 frame end interrupt enable 0: Disable 1: Enable	0x0
3	C3PEIE	R/W	Channel 3 package end interrupt enable 0: Disable 1: Enable	0x0
2	C2PEIE	R/W	Channel 2 package end interrupt enable 0: Disable 1: Enable	0x0
1	C1PEIE	R/W	Channel 1 package end interrupt enable 0: Disable 1: Enable	0x0
0	C0PEIE	R/W	Channel 0 package end interrupt enable 0: Disable 1: Enable	0x0

16.5.2. DMA_STS Register

Table 16-3 Description of DMA_STS Register

Bit	Name	Type	Description	Default

31:16			Reserved.	0
15	C3DA	R/C	Channel 3 data abort interrupt flag, write 1 to clear this flag.	0x0
14	C2DA	R/C	Channel 2 data abort interrupt flag, write 1 to clear this flag.	0x0
13	C1DA	R/C	Channel 1 data abort interrupt flag, write 1 to clear this flag.	0x0
12	C0DA	R/C	Channel 0 data abort interrupt flag, write 1 to clear this flag.	0x0
11	C3FE	R/C	Channel 3 frame end interrupt flag, write 1 to clear this flag.	0x0
10	C2FE	R/C	Channel 2 frame end interrupt flag, write 1 to clear this flag.	0x0
9	C1FE	R/C	Channel 1 frame end interrupt flag, write 1 to clear this flag.	0x0
8	C0FE	R/C	Channel 0 frame end interrupt flag, write 1 to clear this flag.	0x0
7	C3PE	R/C	Channel 3 package end interrupt flag, write 1 to clear this flag.	0x0
6	C2PE	R/C	Channel 2 package end interrupt flag, write 1 to clear this flag.	0x0
5	C1PE	R/C	Channel 1 package end interrupt flag, write 1 to clear this flag.	0x0
4	C0PE	R/C	Channel 0 package end interrupt flag, write 1 to clear this flag.	0x0
3	C3BUSY	R	DMA channel 3 busy register 0: Idle 1: Busy	0x0
2	C2BUSY	R	DMA channel 2 busy register. 0: Idle 1: Busy	0x0
1	C1BUSY	R	DMA channel 1 busy register. 0: Idle 1: Busy	0x0
0	C0BUSY	R	DMA channel 0 busy register. 0: Idle	0x0

			1: Busy	

16.5.3. DMA_CxCTL Register

Table 16-4 shows the bit assignment of DMA_CxCTL register, the data in this register will be latched into DMA channel after the transfer is start, so any modification to this register won't affect the on-going DMA transfer. Only STOP bit can stop the DMA transfer immediately.

Table 16-4 Description of DMA_CxCTL Register

Bit	Name	Type	Description	Default
31:24	FLEN	R/W	Package number register, actual transfer package number is (FLEN + 1). Total length is (FLEN + 1) * (PLEN + 1).	0x0
23:16	PLEN	R/W	Package length register, actual transfer package length is (PLEN + 1). Total length is (FLEN + 1) * (PLEN + 1).	0x0
15	STOP	R/W	Force stop DMA transfer, write 1 to this bit will force the DMA channel back to idle state, programmer should clear this bit to 0 if another DMA transfer need to be assigned into the same channel. 0: Normal mode. 1: Force stop DMA transfer.	0x0
14	AESEN	R/W	Enable AES encrypt/decrypt function of DMA channel. Only DMA channel 3 supports AES function. When AES function is enabled, the SIZE should be set to 32 bits mode and SMODE and TMODE should be set to 1 or 2. And package size should be multiply of 4. 0: Disable. 1: Enable.	0x0
13	CONT	R/W	Continuous mode, DMA transfer will not stop until STOP bit is set to 1. Every time DMA complete all package and frame transfer, it will start from beginning and do the transfer continuously. 0: Discontinuous mode. 1: Continuous mode.	0x0
12	TMODE	R/W	Transfer mode selection register. 0: One DMA request only transfers one single data. 1: One DMA request transfers one package data.	0x0
11:7	DMASEL	R/W	DMA request source selection. Please refer to Table 16-	0x0

			5 of detail about each DMA	
6:5	DMODE	R/W	Destination address mode. 0: Fix. 1: Incremental but rounded at package end. 2: Incremental but rounded at frame end. 3: Reserved.	0x0
4:3	SMODE	R/W	Source address mode. 0: Fix. 1: Incremental but rounded at package end. 2: Incremental but rounded at frame end. 3: Reserved.	0x0
2:1	SIZE	R/W	Transfer size mode. 0: Byte (8 bits). 1: Half-word (16 bits) 2: Word (32 bits) 3: Reserved.	0x0
0	EN	R/W	DMA channel enable register. 0: Disable DMA channel (no effect when CONT is 1) 1: Enable DMA channel. This bit will be cleared automatically by hardware when a DMA transfer is done at CONT is 0.	0x0

Table 16-5 DMA Source Selection

DMASEL	Source	DMASEL	Source	DMASEL	Source	DMASEL	Source
0	Software	8	UART3 TX	16	ISO78161 TX	24	UART 32K 0
1	-	9	UART3 RX	17	ISO78161 RX	25	UART 32K 1
2	UART0 TX	10	UART4 TX	18	TIMER 0	26	CMP1
3	UART0 RX	11	UART4 RX	19	TIMER 1	27	CMP2
4	UART1 TX	12	UART5 TX	20	TIMER 2	28	-
5	UART1 RX	13	UART5 RX	21	TIMER 3	29	-
6	UART2 TX	14	ISO78160 TX	22	SPI1 TX	30	SPI2 TX
7	UART2 RX	15	ISO78160 RX	23	SPI1 RX	31	SPI2 RX

16.5.4. DMA_CxSRC Register

Table 16-6 Description of DMA_CxSRC Register

Bit	Name	Type	Description	Default
31:0	SRC	R/W	DMA source address register. When SIZE in DMA_CxCTL is 1, then this register must be half-word aligned. When SIZE in DMA_CxCTL is 2, then this register must be word aligned. When the SRC is set to 0x4001xxxx, then it will be switch to IO read automatically.	0x00000000

16.5.5. DMA_CxDST Register

Table 16-7 Description of DMA_CxDST Register

Bit	Name	Type	Description	Default
31:0	DST	R/W	DMA destination address register. When SIZE in DMA_CxCTL is 1, then this register must be half-word aligned. When SIZE in DMA_CxCTL is 2, then this register must be word aligned. When the DST is set to 0x4001xxxx, then it will be switch to IO write automatically.	0x00000000

16.5.6. DMA_CxLEN Register

Table 16-8 Description of DMA_CxLEN Register

Bit	Name	Type	Description	Default
31:16	-	-	Reserved.	0
15:8	CFLEN	R	Current transferred package number. The total length of DMA transmission is CFLEN * (PLEN +1) + CPLEN. After all packages are transferred, it will be automatically cleared.	0x00
7:0	CPLEN	R	Current transferred package length. The total length of DMA transmission is CFLEN * (PLEN +1) + CPLEN. After all packages are transferred, it will be automatically cleared.	0x00

16.5.7. DMA_AESCTL Register

Table 16-9 Description of DMA_AESCTL Register

Bit	Name	Type	Description	Default
31:4	-	-	Reserved.	0
3:2	MODE	R/W	AES mode selection register. 0: AES128 1: AES192 2: AES256 3: Reserved.	0x0
1	-	-	Reserved.	0
0	ENC	R/W	AES encode/decode selection register. 0: Decode 1: Encode	0x0

16.5.8. DMA_AESKEYx Register

Table 16-10 Description of DMA_AESKEYx Register

Bit	Name	Type	Description	Default
31:0	KEYx	R/W	AES KEY register. KEY0: bit 31~0 KEY1: bit 63~32 KEY2: bit 95~64 KEY3: bit 127~96 KEY4: bit 159~128 KEY5: bit 191~160 KEY6: bit 223~192 KEY7: bit 255~224. When mode is AES128, only bit 127~0 is used. When mode is AES192, only bit 191~0 is used. When mode is AES256, bit 255~0 is used.	0x00000000

17. UART Controller

17.1. Introduction

The UART controller is used to transmit/receive data via UART protocol. There are total 6 UART controller in V94XX, each UART controller can be program individually and has its own interrupt to CPU. The UART controller can support 8 bits transfer without parity or 9 bits transfer with even or odd parity. One data buffer and one shift register is used for transmit engine, and another set of data buffer and shift register are used for receive engine. The setting in UART controller will be reset after wake-up from sleep or deep-sleep mode, programmer should restore the setting manually after wake-up from these two states. The baud rate range of UART is 300~819200bps.

17.2. Feature

--Programmable baud rate generator

--8 bits or 9 bits with odd/even parity transfer.

--Parity error detection.

--Transmit/Receive interrupt flag.

--Transmit/Receive overrun interrupt flag.

17.3. Block Diagram

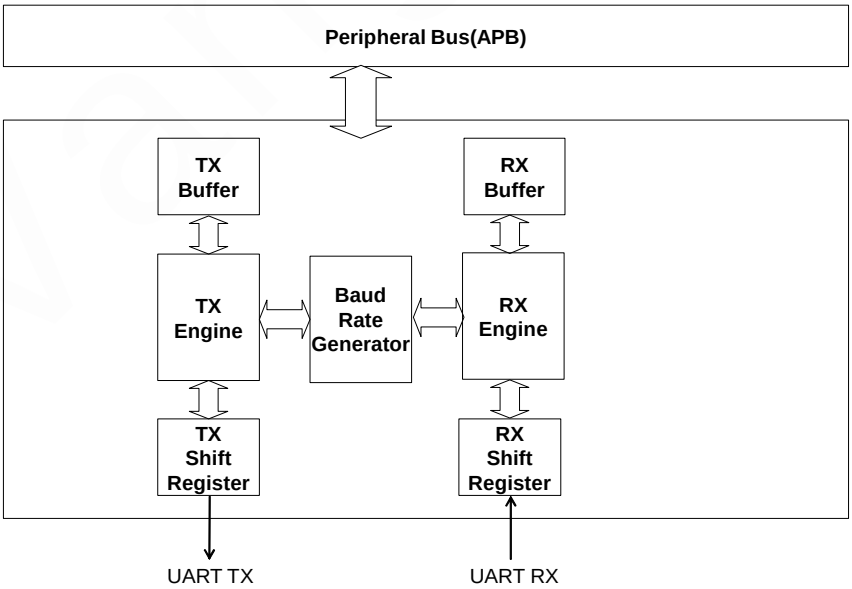

Figure 17-1 Functional Block Diagram of UART Controller

17.4. Register Location

Table 17-1 Register Location of UART Controller (UART Base: 0x40011800)

Name	Type	Address	Description	Default
UART0_DATA	R/W	0x0000	UART0 data register	0x00
UART0_STATE	R/C	0x0004	UART0 status register	0x00
UART0_CTRL	R/W	0x0008	UART0 control register	0x000
UART0_INTSTS	R/C	0x000C	UART0 interrupt status register	0x00
UART0_BAUDDIV	R/W	0x0010	UART0 baud rate divide register	0x00000
UART0_CTRL2	R/W	0x0014	UART0 control register 2	0x0
UART1_DATA	R/W	0x0020	UART1 data register	0x00
UART1_STATE	R/C	0x0024	UART1 status register	0x00
UART1_CTRL	R/W	0x0028	UART1 control register	0x000
UART1_INTSTS	R/C	0x002C	UART1 interrupt status register	0x00
UART1_BAUDDIV	R/W	0x0030	UART1 baud rate divide register	0x00000
UART1_CTRL2	R/W	0x0034	UART1 control register 2	0x0
UART2_DATA	R/W	0x0040	UART2 data register	0x00
UART2_STATE	R/C	0x0044	UART2 status register	0x00
UART2_CTRL	R/W	0x0048	UART2 control register	0x000
UART2_INTSTS	R/C	0x004C	UART2 interrupt status register	0x00
UART2_BAUDDIV	R/W	0x0050	UART2 baud rate divide register	0x00000
UART2_CTRL2	R/W	0x0054	UART2 control register 2	0x0
UART3_DATA	R/W	0x0060	UART3 data register	0x00
UART3_STATE	R/C	0x0064	UART3 status register	0x00
UART3_CTRL	R/W	0x0068	UART3 control register	0x000
UART3_INTSTS	R/C	0x006C	UART3 interrupt status register	0x00
UART3_BAUDDIV	R/W	0x0070	UART3 baud rate divide register	0x00000
UART3_CTRL2	R/W	0x0074	UART3 control register 2	0x0
UART4_DATA	R/W	0x0080	UART4 data register	0x00
UART4_STATE	R/C	0x0084	UART4 status register	0x00
UART4_CTRL	R/W	0x0088	UART4 control register	0x000
UART4_INTSTS	R/C	0x008C	UART4 interrupt status register	0x00

UART4_BAUDDIV	R/W	0x0090	UART4 baud rate divide register	0x00000
UART4_CTRL2	R/W	0x0094	UART4 control register 2	0x0
UART5_DATA	R/W	0x00A0	UART5 data register	0x00
UART5_STATE	R/C	0x00A4	UART5 status register	0x00
UART5_CTRL	R/W	0x00A8	UART5 control register	0x000
UART5_INTSTS	R/C	0x00AC	UART5 interrupt status register	0x00
UART5_BAUDDIV	R/W	0x00B0	UART5 baud rate divide register	0x00000
UART5_CTRL2	R/W	0x00B4	UART5 control register 2	0x0

Table 17-2 Register Location of MISC Controller for UART(MISC Base: 0x40013000)

Name	Type	Address	Description	Default
MISC_IREN	R/W	0x000C	IR enable control register	0x00
MISC_DUTYL	R/W	0x0010	IR Duty low pulse control register	0x0000
MISC_DUTYH	R/W	0x0014	IR Duty high pulse control register	0x0000

17.5. Register Definition

17.5.1. UARTx_DATA Register

Table 17-3 Description of UARTx_DATA Register

Bit	Name	Type	Description	Default
31:8	-	-	Reserved.	0
7:0	DATA	R/W	Read: Receive data Write: Transmit data	0x0

17.5.2. UARTx_STATE Register

Table 17-4 Description of UARTx_STATE Register

Bit	Name	Type	Description	Default
31:7	-	-	Reserved.	0
6	RXPSTS	R	Receive parity data flag. This flag show the parity bit of last receive data.	0x0
5	TXDONE	R/C	Transmit done flag. This flag will be set when a single	0x0

			byte data is transmitted. The bit will be cleared when programmer write 1 to this bit or write 1 to TXDONEIF bit in UARTx_INTSTS register.	
4	RXPE	R/C	Receive parity error flag. This flag will be set when receive data's parity does not meet expectation. The bit will be cleared when programmer write 1 to this bit or write 1 to RXPEIF bit in UARTx_INTSTS register.	0x0
3	RXOV	R/C	Receive buffer overrun flag. This flag will be set when RXFULL is 1 and another new data is received from RX engine. The bit will be cleared when programmer write 1 to this bit or write 1 to RXOVIF bit in UARTx_INTSTS register.	0x0
2	TXOV	R/C	Transmit buffer overrun flag. This flag will be set when TXFULL is 1 and another new data is written into UARTx_DATA register. The bit will be cleared when programmer write 1 to this bit or write 1 to TXOVIF bit in UARTx_INTSTS register.	0x0
1	RXFULL	R	Receive buffer full register. 0: Receive buffer is empty. 1: Receive buffer is full. This flag will be set when a data is receive from the UART RX engine, and will be cleared to 0 when programmer read the data from UARTx_DATA register.	0x0
0			Reserved.	0

17.5.3. UARTx_CTRL Register

Table 17-5 Description of UARTx_CTRL Register

Bit	Name	Type	Description	Default
31:9	-	-	Reserved.	0
8	TXDONEIE	R/W	Transmit done interrupt enable register.	0x0
7	RXPEIE	R/W	Receive parity error interrupt enable register.	0x0
6	-	-	Reserved.	0
5	RXOVIE	R/W	Receive overrun interrupt enable register.	0x0
4	TXOVIE	R/W	Transmit overrun interrupt enable register.	0x0
3	RXIE	R/W	Receive interrupt enable register.	0x0
2	-	-	Reserved.	0

1	RXEN	R/W	Receive engine enable register.	0x0
0	TXEN	R/W	Transmit engine enable register.	0x0

17.5.4. UARTx_INTSTS Register

Table 17-6 Description of UARTx_INTSTS Register

Bit	Name	Type	Description	Default
31:6	-	-	Reserved.	0
5	TXDONEIF	R/C	Transmit done flag. This flag will be set when a single byte is transmitted and TXDONEIE is 1. The bit will be cleared when programmer write 1 to this bit or write 1 to TXDONE bit in UARTx_STATE register.	0x0
4	RXPEIF	R/C	Receive parity error flag. This flag will be set when receive data's parity does not meet expectation and RXPEIEis1.The bit will be cleared when programmer write 1 to this bit or write 1 to RXPE bit in UARTx_STATE register.	0x0
3	RXOVIF	R/C	Receive buffer overrun flag. This flag will be set when RXOVIE is 1 and RXFULL is 1 and another new data is received from RX engine. The bit will be cleared when programmer write 1 to this bit or write 1 to RXOV bit in UARTx_STATE register.	0x0
2	TXOVIF	R/C	Transmit buffer overrun flag. This flag will be set when TXOVIE is 1 and TXFULL is 1 and another new data is written into UARTx_DATA register. The bit will be cleared when programmer write 1 to this bit or write 1 to TXOV bit in UARTx_STATE register.	0x0
1	RXIF	R/C	Receive interrupt flag. This bit will be set when a data is received and put in UARTx_DATA register. This bit will be cleared when write 1 to this register.	0x0
0	-	-	Reserved.	0

17.5.5. UARTx_BAUDDIV Register

Table 17-7 Description of UARTx_BAUDDIV Register

Bit	Name	Type	Description	Default
31:20	-	-	Reserved.	0
19:0	BAUDDIV	R/W	Baud rate divider register, this register must be set	0x0

			before enable UART engine. BAUDDIV = APBCLK/Baud-rate. For example, when APBCLK = 6.5536MHz and baud-rate is 9600, fill 6553600/9600 = 682 in this register.	

17.5.6. UARTx_CTRL2 Register

Table 17-8 Description of UARTx_CTRL2 Register

Bit	Name	Type	Description	Default
31:4	-	-	Reserved.	0
3:2	PMODE	R/W	Parity mode control register, this register is valid only when MODE is set to 1. 0: Even parity. 1: Odd parity. 2: Always 0 at parity bit. 3: Always 1 at parity bit.	0x0
1	MODE	R/W	UART mode control register. 0: 1+8+1 mode. 1: 1+8+1+1 mode, the parity bit is controlled by PMODE register.	0x0
0	MSB	R/W	LSB/MSB transmit order control register. 0: LSB transmit first. 1: MSB transmit first.	0x0

17.5.7. MISC_IREN Register

Table 17-9 Description of MISC_IREN Register

Bit	Name	Type	Description	Default
31:6	-	-	Reserved.	0
5:0	IREN	R/W	IR enable control register. Each bit in this register corresponded to 1 UART TX channel. When IREN[x] is set to 1, it means UART TX[x] will be modulated with IR pulse to output.	0x00

17.5.8. MISC_DUTYL Register

Table 17-10 Description of MISC_DUTYL Register

Bit	Name	Type	Description	Default
31:16			Reserved.	0
15:0	DUTYL	R/W	IR low pulse width control register. The low pulse width will be (DUTYL + 1)*APBCLK period.	0x0000

17.5.9. MISC_DUTYH Register

Table 17-11 Description of MISC_DUTYH Register

Bit	Name	Type	Description	Default
31:16	-	-	Reserved.	0
15:0	DUTYH	R/W	IR high pulse width control register. The high pulse width will be (DUTYH + 1)*APBCLK period.	0x0000

18. UART 32K Controller

18.1. Introduction

The UART 32K controller is used to receive data via UART protocol. There are two individual UART 32K controllers in V94XX, which can select input from UART rx0 ~ rx3. UART 32K controller is designed to operate at 32K crystal frequency, so it can work under sleep or deep sleep mode. The typical baud rate is 9600. The UART 32K controller can support 8 bits transfer without parity or 9 bits transfer with even or odd parity. One data buffer and one shift register is used for receive engine. The baud rate range of UART 32K is 300~14400bps.

18.2. Feature

--Operated under sleep or deep-sleep mode.

--Wake-up capability under sleep or deep-sleep mode.

--Programmable Baud rate generator

--8 bits or 9 bits with odd/even parity transfer.

--Parity error detection.

--Receive interrupt flag.

--Receive parity error flag.

--Receive overrun interrupt flag.

Vangotech

18.3. Block Diagram

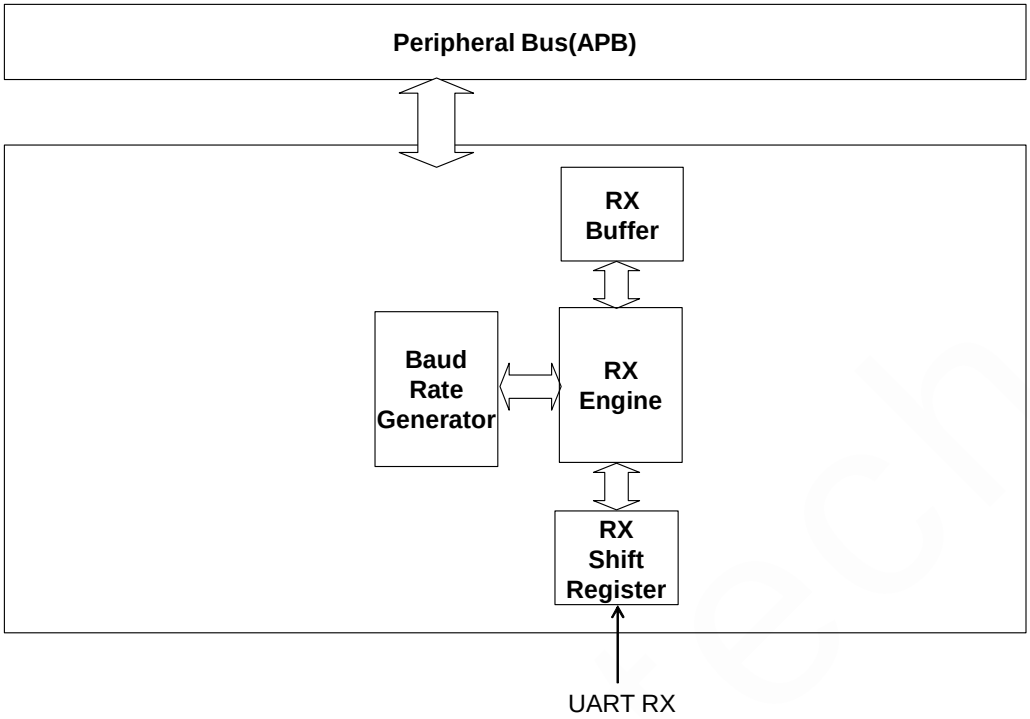

Figure 18-1 Functional Block Diagram of UART 32K Controller

18.4. Register Location

Table 18-1 Register Location of UART 32K Controller (UART 32K 0 Base: 0x40014100)

Name	Type	Address	Description	Default
U32K0_CTRL0	R/W	0x0000	UART 32K 0 control register 0	0x00
U32K0_CTRL1	R/W	0x0004	UART 32K 0 control register 1	0x00
U32K0_PHASE	R/W	0x0008	UART 32K 0 baud rate control register	0x4B00
U32K0_DATA	R	0x000C	UART 32K 0 receive data buffer	--
U32K0_STS	R/C	0x0010	UART 32K 0 interrupt status register	0x00
U32K1_CTRL0	R/W	0x0080	UART 32K 1 control register 0	0x00
U32K1_CTRL1	R/W	0x0084	UART 32K 1 control register 1	0x00
U32K1_PHASE	R/W	0x0088	UART 32K 1 baud rate control register	0x4B00
U32K1_DATA	R	0x008C	UART 32K 1 receive data buffer	--
U32K1_STS	R/C	0x0090	UART 32K 1 interrupt status register	0x00

18.5. Register Definition

18.5.1. U32Kx_CTRL0 Register

Table 18-2 Description of U32Kx_CTRL0 Register

Bit	Name	Type	Description	Default
31:9	-	-	Reserved.	0
8	WKUMODE	R/W	Wake-up mode control register. This register is valid when RXIE = 1. 0: Wake-up when a package is received no matter parity or stop bit is correct or not. 1: Wake-up only when parity bit and stop bit is correct.	0x0
7:6	DEBSEL	R/W	De-bounce control register 0: No de-bounce. 1: 2 RTCCLK clocks de-bounce. 2: 3 RTCCLK clocks de-bounce. 3: 4 RTCCLK clocks de-bounce. This register is used when the UART bus is dirty, enable the de-bounce function can reduce the noise on the receive data. But a too large de-bounce cycles may result in loss of receive data.	0x0
5:4	PMODE	R/W	Parity mode control register, this register is valid only when MODE is set to 1. 0: Even parity. 1: Odd parity. 2: Always 0 at parity bit. 3: Always 1 at parity bit.	0x0
3	MODE	R/W	UART mode control register. 0: 1+8+1 mode. 1: 1+8+1+1 mode, the parity bit is controlled by PMODE register.	0x0
2	MSB	R/W	UART receive order control register. 0: LSB receive first.	0x0

			1: MSB receive first.	
1	ACOFF	R/W	Auto-calibration off control register. In order to correct receive UART data under RTCCLK clock, there is a hardware auto calibration mechanism inside the controller. By default, this mode is turned on, programmer can set 1 to this bit to turn off this function. 0: Enable auto-calibration. 1: Disable auto-calibration.	0x0
0	EN	R/W	UART32K controller enable register. When this bit is set to 1, the UART32K controller will start to receive data after two 32768 Hz clock cycles. So use must set correct parameter and control register before set this register to 1. 0: Disable. 1: Enable.	0x0

18.5.2. U32Kx_CTRL1 Register

Table 18-3 Description of U32Kx_CTRL1 Register

Bit	Name	Type	Description	Default
31:6	-	-	Reserved.	0x0
5:4	RXSEL	R/W	Receive data select register. 0: From UART RX0 (IOA12). 1: From UART RX1 (IOA13). 2: From UART RX2 (IOA14). 3: From UART RX3 (IOA15).	0x0
3			Reserved.	
2	RXOVIE	R/W	Receive overrun interrupt/wake-up enable register.	0x0
1	RXPEIE	R/W	Receive parity error interrupt/wake-up enable register.	0x0
0	RXIE	R/W	Receive interrupt/wake-up enable register. When enabled, when WKUMODE is 0, it will wake up as long as it receives serial data; when WKUMODE is 1, it will wake up only when parity and stop bits are correct.	0x0

18.5.3. U32Kx_PHASE Register

Table 18-4 Description of U32Kx_PHASE Register

Bit	Name	Type	Description	Default
31:16	-	-	Reserved.	0
15:0	PHASE	R/W	Baud rate divider register, this register must be set before enable UART 32K engine. PHASE = 65536*Baud-rate/32768. For example, when baud-rate is 9600, fill 65536*9600/32768 = 19200 in this register. The maximum baud rate which UART 32K can support is 9600. When PSCA in RTC_PSCA register is not 0, the value in this register should be calculated by the divided RTCCLK frequency.	0x4B00

18.5.4. U32Kx_DATA Register

Table 18-5 Description of U32Kx_DATA Register

Bit	Name	Type	Description	Default
31:8	-	-	Reserved.	0
7:0	DATA	R	Read: Receive data.	--

18.5.5. U32Kx_STS Register

Table 18-6 Description of U32Kx_STS Register

Bit	Name	Type	Description	Default
31:3	-	-	Reserved.	0
2	RXOV	R/C	Receive buffer overrun flag. This flag will be set when receive FIFO is full and another new data is received from RX engine. The bit will be cleared when programmer write 1 to this bit.	0x0
1	RXPE	R/C	Receive parity error flag. This flag will be set when receive data's parity does not meet expectation. The bit will be cleared when programmer write 1 to this bit.	0x0
0	RXIF	R/C	Receive interrupt flag, this bit will be set when a data	0x0

			is received and put in U32K_DATA register. This bit will be cleared when write 1 to this register.	

vangotech

19. ISO7816 Controller

19.1. Introduction

The ISO7816 controller is an enhanced UART protocol which is able to do half-duplex communication on the 2 wires bus. There are total 2 ISO7816 controllers in V94XX, each ISO7816 controller can be program individually and has its own interrupt to CPU. A clock divider is also included inside the IP which is capable to generate a 1~5MHz clock for ISO7816 device. The setting in ISO7816 controller will be reset after wake-up from sleep or deep-sleep mode, programmer should restore the setting manually after wake-up from these two states.

19.2. Feature

--Programmable Baud rate generator

--Support automatically retry.

--Support half-duplex transmit/receive.

--Support clock divider.

19.3. Block Diagram

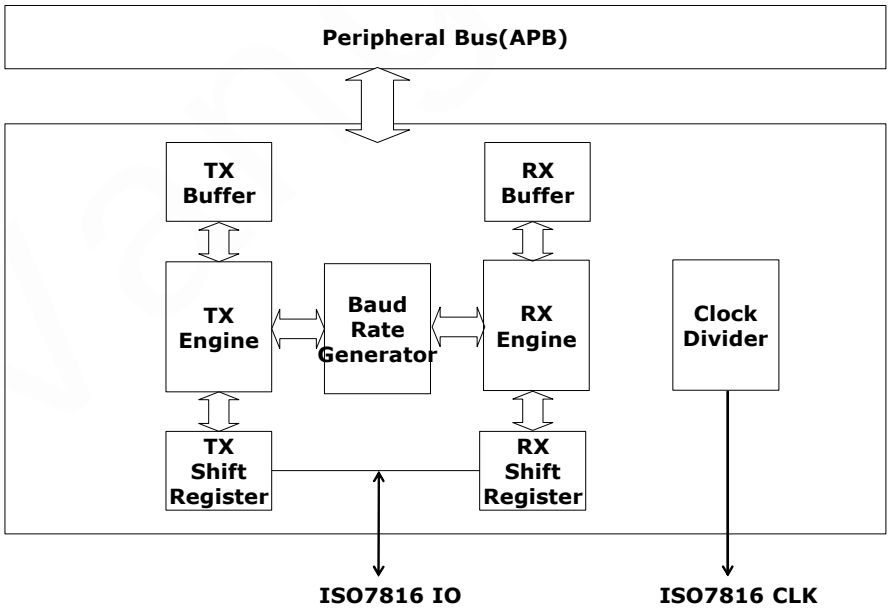

Figure 19-1 Functional Block Diagram of ISO7816 Controller

19.4. Register Location

Table 19-1 Register Location of ISO7816 Controller (ISO7816 Base: 0x40012000)

Name	Type	Address	Description	Default
ISO78160_BAUDDIVL	R/W	0x0004	ISO78160 baud-rate low byte register	0x00
ISO78160_BAUDDIVH	R/W	0x0008	ISO78160 baud-rate high byte register	0x00
ISO78160_DATA	R/W	0x000C	ISO78160 data register	0x00
ISO78160_INFO	R/C	0x0010	ISO78160 information register	0x00
ISO78160_CFG	R/W	0x0014	ISO78160 control register	0x00
ISO78160_CLK	R/W	0x0018	ISO78160 clock divider control register	0x00
ISO78161_BAUDDIVL	R/W	0x0044	ISO78161 baud-rate low byte register	0x00
ISO78161_BAUDDIVH	R/W	0x0048	ISO78161 baud-rate high byte register	0x00
ISO78161_DATA	R/W	0x004C	ISO78161 data register	0x00
ISO78161_INFO	R/C	0x0050	ISO78161 information register	0x00
ISO78161_CFG	R/W	0x0054	ISO78161 control register	0x00
ISO78161_CLK	R/W	0x0058	ISO78161 clock divider control register	0x00

19.5. Register Definition

19.5.1. ISO7816x_BAUDDIVL Register

Table 19-2 Description of ISO7816x_BAUDDIVL Register

Bit	Name	Type	Description	Default
31:8	-	-	Reserved.	0
7:0	BAUDDIVL	R/W	Low byte of baud-rate divider.	0x0

19.5.2. ISO7816x_BAUDDIVH Register

Table 19-3 Description of ISO7816x_BAUDDIVH Register

Bit	Name	Type	Description	Default
31:8	-	-	Reserved.	0
7:0	BAUDDIVH	R/W	High byte of baud-rate divider. The baud-rate counter is count from BAUDDIV to 0xFFFF, so the setting	0x0

			should be. BAUDDIV = 0x10000 – (APBCLK/Baud-rate). For example, when APBCLK is 6.5536MHz and baud-rate is 9600, then 0x10000-(6553600/9600) = 0xFD56 should be written into this register.	

19.5.3. ISO7816x_DATA Register

Table 19-4 Description of ISO7816x_DATA Register

Bit	Name	Type	Description	Default
31:8	-	-	Reserved.	0
7:0	DATA	R/W	Read: Receive data, when receive data is not read by programmer and another data has been received, the OVIF flag will be set. Write: Transmit data, a write to this port will trigger a transmit event on the ISO7816 bus.	0x0

19.5.4. ISO7816x_INFO Register

Table 19-5 Description of ISO7816x_INFO Register

Bit	Name	Type	Description	Default
31:8	-	-	Reserved.	0
7	OVIF	R/C	Receive overflow flag. This bit will be set when a data is received by not been read by CPU but another receive data is coming in. This bit can be cleared by write 1 to this flag.	0x0
6	SDIF	R/C	Transmit interrupt flag. This bit will set when a byte has been transmitted and ACK has been received. This bit will be set no matter the received ACK is 0 or 1. This bit can be cleared by write 1 to this flag.	0x0
5	RCIF	R/C	Receive interrupt flag. This bit will set when a byte has been received and ACK has been transmitted. This bit can be cleared by write 1 to this flag.	0x0
4	LSB	R/W	MSB/LSB transmit/receive order control register. 0: Transmit MSB first. 1: Transmit LSB first.	0x0
3	SDERR	R/C	When the received ACK is 0 during transmit mode, this	0x0

			bit will be set to 1. This bit can be clear by write 1 to this bit.	
2	RCERR	R/C	When received data have check sum error, this bit will be set to 1. This bit can be clear by write 1 to this bit.	0x0
1	CHKSUM	R/W	The transmitted or received data's check sum bit. This bit can be read/write by CPU, by the original message will be lost.	0x0
0	RCACK	R/W	The received ACK at the end of transmit. This bit can be read/write by CPU, by the original message will be lost.	0x0

19.5.5. ISO7816x_CFG Register

Table 19-6 Description of ISO7816x_CFG Register

Bit	Name	Type	Description	Default
31:8	-	-	Reserved.	0
7	OVIE	R/W	Receive overrun interrupt enable register.	0x0
6	SDIE	R/W	Transmit interrupt enable register.	0x0
5	RCIE	R/W	Receive interrupt enable register.	0x0
4	ACKLEN	R/W	ACK low period when receive an error data. 0: 1 bit 1: 2 bits.	0x0
3	AUTOSD	R/W	Automatic re-transmit when receive ACK is 0. 0: Disable automatic re-transmit mode. 1: Enable automatic re-transmit mode.	0x0
2	AUTORC	R/W	Automatic response ACK as 0 when receive an error data to let transmitter re-send the data. 0: Disable automatic re-receive mode. 1: Enable automatic re-receive mode.	0x0
1	CHKP	R/W	Parity mode control register. 0: Even parity 1: Odd parity.	0x0
0	EN	R/W	ISO7816 enable register. 0: Disable ISO7816 function. 1: Enable ISO7816 function.	0x0

19.5.6. ISO7816x_CLK Register

Table 19-7 Description of ISO7816x_CLK Register

Bit	Name	Type	Description	Default
31:8	-	-	Reserved.	0
7	CLKEN	R/W	ISO7816 clock output enable. 0: Disable clock output. 1: Enable clock output.	0x0
6:0	CLKDIV	R/W	The ISO7816 clock divider ratio. 0: APBCLK/1 1: APBCLK /2 2: APBCLK /3 … 127: APBCLK /128	0x0

In ISO7816's protocol, the re-transmit should be less or equal to 3 times, this part should be take care by software to disable the auto transmit or receive function after two times of failure retry.

The following table shows the ISO7816's package format.

Table 19-8 Package format of ISO7816

bit	0	1~8	9	10	11	12	0	…
Transmit Direction	Transmitter→Receiver			Receiver→Transmitter		--	Transmitter→Receiver	
Definition	Start bit	Data	Parity bit	ACK*		Wait	Start bit	…
Value	0	MSB→LSB	P	ACK*		1	0	…
TX	0	MSB→LSB	P	1			0	…
RX	1	1	1	ACK*		1	1	…
Description	10 bits data			3 bits guarding time			Next Frame	

*If ACK is 0, then the RX will be reset from 1 to 0 at the middle of 10th bit, and set to 1 at 11th or 12th bit, which is controlled by ACKLEN in ISO7816x_CFG.

The transmit package contains totally 10 bits including a start bit and 8 bits data and 1 parity bit. And

then in a 3 bits guarding time, the receiver will check the parity correctness response 1 or 2 bits ACK to transmitter. At bit 12, both transmitter and receiver should be kept at high state before next package is ready to be transmitted.

Vangotech

20. Timer/PWM Controller

20.1. Introduction

There are in total 8 timers in V94XX. Four of them are general purpose 32 bits timer. Another 4 timers are 16 bits timers with PWM function. Each timer can generate interrupt to CM0. Each PWM can output 3 outputs with different output waveform. The setting in timer/PWM controller will be reset after wake-up from sleep or deep-sleep mode, programmer should restore the setting manually after wake-up from these two states.

20.2. Feature

--4 32 bits general purpose count timer

--4 16 bits PWM timer.

--Each PWM timer can have at most 3 outputs.

--8 output modes.

20.3. Block Diagram

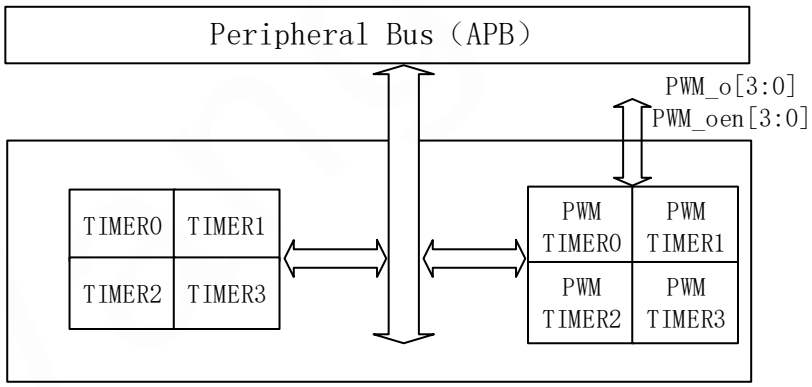

Figure 20-1 Functional Block Diagram of TIMER Controller

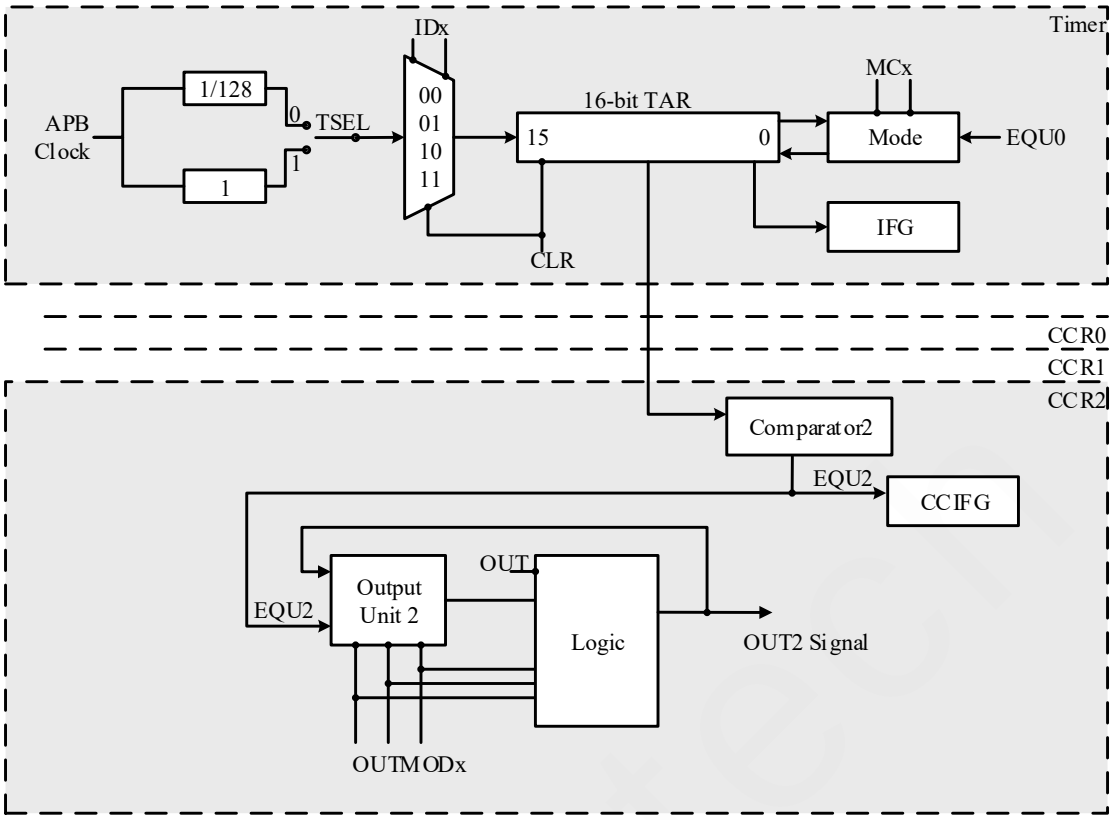

Figure 20-2 Functional Block Diagram of PWM TIMER Controller

20.4. Register Location

Table 20-1 Register Location of 32b TIMER Controller (32b TIMER Base: 0x40012800)

Name	Type	Address	Description	Default
TMR0_CTRL	R/W	0x0000	Timer 0's control register	0x0
TMR0_VALUE	R/W	0x0004	Timer 0's current count register	0x00000000
TMR0_RELOAD	R/W	0x0008	Timer 0's reload register	0x00000000
TMR0_INT	R/C	0x000C	Timer 0's interrupt status register	0x0
TMR1_CTRL	R/W	0x0020	Timer 1's control register	0x0
TMR1_VALUE	R/W	0x0024	Timer 1's current count register	0x00000000
TMR1_RELOAD	R/W	0x0028	Timer 1's reload register	0x00000000
TMR1_INT	R/C	0x002C	Timer 1's interrupt status register	0x0
TMR2_CTRL	R/W	0x0040	Timer 2's control register	0x0
TMR2_VALUE	R/W	0x0044	Timer 2's current count register	0x00000000
TMR2_RELOAD	R/W	0x0048	Timer 2's reload register	0x00000000

TMR2_INT	R/C	0x004C	Timer 2's interrupt status register	0x0
TMR3_CTRL	R/W	0x0060	Timer 3's control register	0x0
TMR3_VALUE	R/W	0x0064	Timer 3's current count register	0x00000000
TMR3_RELOAD	R/W	0x0068	Timer 3's reload register	0x00000000
TMR3_INT	R/C	0x006C	Timer 3's interrupt status register	0x0

Table 20-2 Register Location of 16b PWM TIMER Controller (16b PWM TIMER Base: 0x40012900)

Name	Type	Address	Description	Default
PWM0_CTL	R/W	0x0000	PWM Timer 0's control register	0x00
PWM0_TAR	R	0x0004	PWM Timer 0's current count register	0x0000
PWM0_CCTL0	R/W	0x0008	PWM Timer 0's compare control register 0	0x000
PWM0_CCTL1	R/W	0x000C	PWM Timer 0's compare control register 1	0x000
PWM0_CCTL2	R/W	0x0010	PWM Timer 0's compare control register 2	0x000
PWM0_CCR0	R/W	0x0014	PWM Timer 0's compare data register 0	0x0000
PWM0_CCR1	R/W	0x0018	PWM Timer 0's compare data register 1	0x0000
PWM0_CCR2	R/W	0x001C	PWM Timer 0's compare data register 2	0x0000
PWM1_CTL	R/W	0x0020	PWM Timer 1's control register	0x00
PWM1_TAR	R	0x0024	PWM Timer 1's current count register	0x0000
PWM1_CCTL0	R/W	0x0028	PWM Timer 1's compare control register 0	0x000
PWM1_CCTL1	R/W	0x002C	PWM Timer 1's compare control register 1	0x000
PWM1_CCTL2	R/W	0x0030	PWM Timer 1's compare control register 2	0x000
PWM1_CCR0	R/W	0x0034	PWM Timer 1's compare data register 0	0x0000
PWM1_CCR1	R/W	0x0038	PWM Timer 1's compare data register 1	0x0000
PWM1_CCR2	R/W	0x003C	PWM Timer 1's compare data register 2	0x0000
PWM2_CTL	R/W	0x0040	PWM Timer 2's control register	0x00
PWM2_TAR	R	0x0044	PWM Timer 2's current count register	0x0000
PWM2_CCTL0	R/W	0x0048	PWM Timer 2's compare control register 0	0x000
PWM2_CCTL1	R/W	0x004C	PWM Timer 2's compare control register 1	0x000
PWM2_CCTL2	R/W	0x0050	PWM Timer 2's compare control register 2	0x000
PWM2_CCR0	R/W	0x0054	PWM Timer 2's compare data register 0	0x0000
PWM2_CCR1	R/W	0x0058	PWM Timer 2's compare data register 1	0x0000

PWM2_CCR2	R/W	0x005C	PWM Timer 2's compare data register 2	0x0000
PWM3_CTL	R/W	0x0060	PWM Timer 3's control register	0x00
PWM3_TAR	R	0x0064	PWM Timer 3's current count register	0x0000
PWM3_CCTL0	R/W	0x0068	PWM Timer 3's compare control register 0.	0x000
PWM3_CCTL1	R/W	0x006C	PWM Timer 3's compare control register 1	0x000
PWM3_CCTL2	R/W	0x0070	PWM Timer 3's compare control register 2	0x000
PWM3_CCR0	R/W	0x0074	PWM Timer 3's compare data register 0	0x0000
PWM3_CCR1	R/W	0x0078	PWM Timer 3's compare data register 1	0x0000
PWM3_CCR2	R/W	0x007C	PWM Timer 3's compare data register 2	0x0000
PWM_O_SEL	R/W	0x00F0	PWM output selection register	0xDB51

20.5. Register Definition

20.5.1. TMRx_CTRL Register

Table 20-3 Description of TMRx_CTRL Register

Bit	Name	Type	Description	Default
31:4	-	-	Reserved.	0
3	INTEN	R/W	Timer x interrupt enable register.	0x0
2	EXTCLK	R/W	Select ext_clk (IOB15) as clock source. The ext_clk's rising edge will be used as internal down counter's enable signal. Every time when the ext_clk is rising, the internal counter will decrease by 1. Under this mode, the frequency of ext_clk should be lower than PLCK/6.	0x0
1	EXTEN	R/W	When the ext_clk (IOB15) is logic 1, the internal down counter will be decreased by 1 with the speed of PCLK. A two clocks sync logic will be applied on the ext_clk to avoid the glitch on the ext_clk. When both the EXTCLK and EXTEN bits are enabled, the EXTCLK bit has higher priority.	0x0
0	EN	R/W	Timer x enable control register.	0x0

20.5.2. TMRx_VALUE Register

Table 20-4 Description of TMRx_VALUE Register

Bit	Name	Type	Description	Default
31:0	VALUE	R/W	Timer x current value register.	0x00000000

20.5.3. TMRx_RELOAD Register

Table 20-5 Description of TMRx_RELOAD Register

Bit	Name	Type	Description	Default
31:0	RELOAD	R/W	Timer x reload value register. A write to this register sets the current value. Every time when the timer down count to 0, the value in this register will be reloaded into the counter and start to down count again. At the same time, the INT bit will be set to 1. The RELOAD of the timer can be calculated by the following equation. RELOAD = Period * APBCLK - 1.	0x00000000

20.5.4. TMRx_INT Register

Table 20-6 Description of TMRx_INT Register

Bit	Name	Type	Description	Default
31:1	-	-	Reserved.	0
0	INT	R/C	Timer x interrupt status register, write 1 to clear this bit. When the internal down counter timer reach 0, this bit will be set to 1.	0x0

20.5.5. PWMx_CTL Register

Table 20-7 Description of PWMx_CTL Register

Bit	Name	Type	Description	Default
31:8	-	-	Reserved.	0
7:6	ID	R/W	PWM timer x's Input clock divider control. 0: Input clock divide by 2 1: Input clock divide by 4 2: Input clock divide by 8 3: Input clock divide by 16	0x0

5:4	MC	R/W	PWM Timer mode control 0: Timer stop. 1: Up-count mode: timer will count to CCR0 and restart from 0. 2: Continuous mode: timer will count to 0xFFFF and start from 0. 3: Up/Down mode: timer will count to CCR0 and then decrease to 0. Refer to figure 2 for each mode.	0x0
3	TSEL	R/W	Clock source selection 0: APB Clock/128. 1: APB Clock.	0x0
2	CLR	R/W	TAR clear register, when this bit is set to 1, the TAR will be clear to 0. This bit will be cleared to 0 automatically after TAR is cleared.	0x0
1	IE	R/W	PWM Timer x's interrupt enable register.	0x0
0	IFG	R/C	PWM Timer x's interrupt status flag, write 1 to clear this flag to 0. Up mode: Set when counter change from CCR0 to 0. Continuous mode: Set when counter change from 0xFFFF to 0. Up-Down mode: Set when counter change from 0x0001 to 0.	0x0

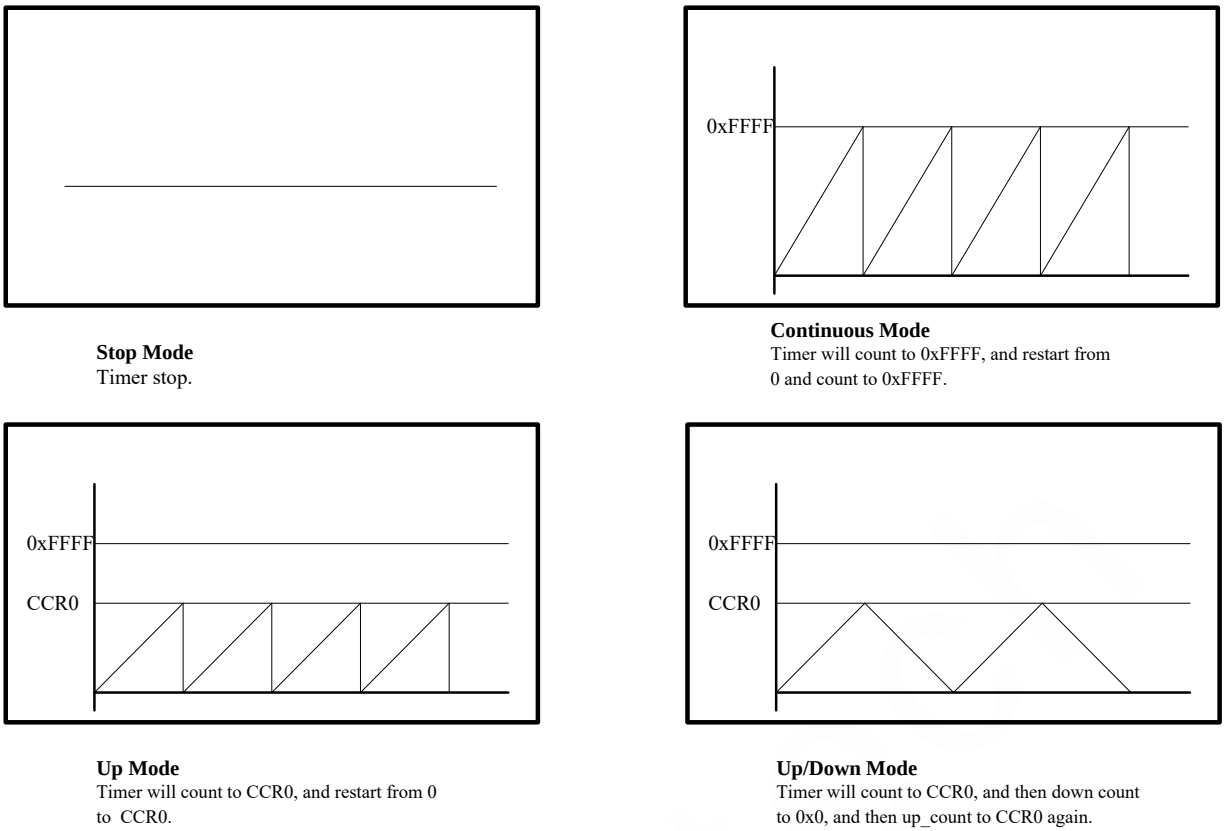

Stop Mode
Timer stop.

Continuous Mode
Timer will count to 0xFFFF, and restart from 0 and count to 0xFFFF.

Up Mode
Timer will count to CCR0, and restart from 0 to CCR0.

Up/Down Mode
Timer will count to CCR0, and then down count to 0x0, and then up_count to CCR0 again.

Figure 20-3 Mode description of PWM TIMER Controller

When MC is set to a non-zero value, the timer will start to work. Under up mode or up/down mode, if PWMx_CCR0 is set to 0, then timer x will stop counting. The timer will start to count again if a non-zero value is written to PWMx_CCR0.

Under up-mode, if the CCR0 is changed during the operation time and new CCR value is larger than current count value, then the timer will count to the new CCR0 then return to 0. And if the new CCR0 is smaller than current count value, the timer will count one tick and reset to 0 to start again.

Under up-down mode and the timer is under up-count process, if the CCR0 is changed during the operation time and new CCR value is larger than current count value, then the timer will count to the new CCR0 then down count to 0. And if the new CCR0 is smaller than current count value, the timer will count one tick and start to down count to 0. Under up-down mode and the timer is under down-count process, if the CCR0 is changed during the operation time, then the timer will continuously complete the down count process.

Under continuous mode, user can set the output frequency depends on the dynamic setting of CCR0~CCR2. The following diagram shows an example of this application.

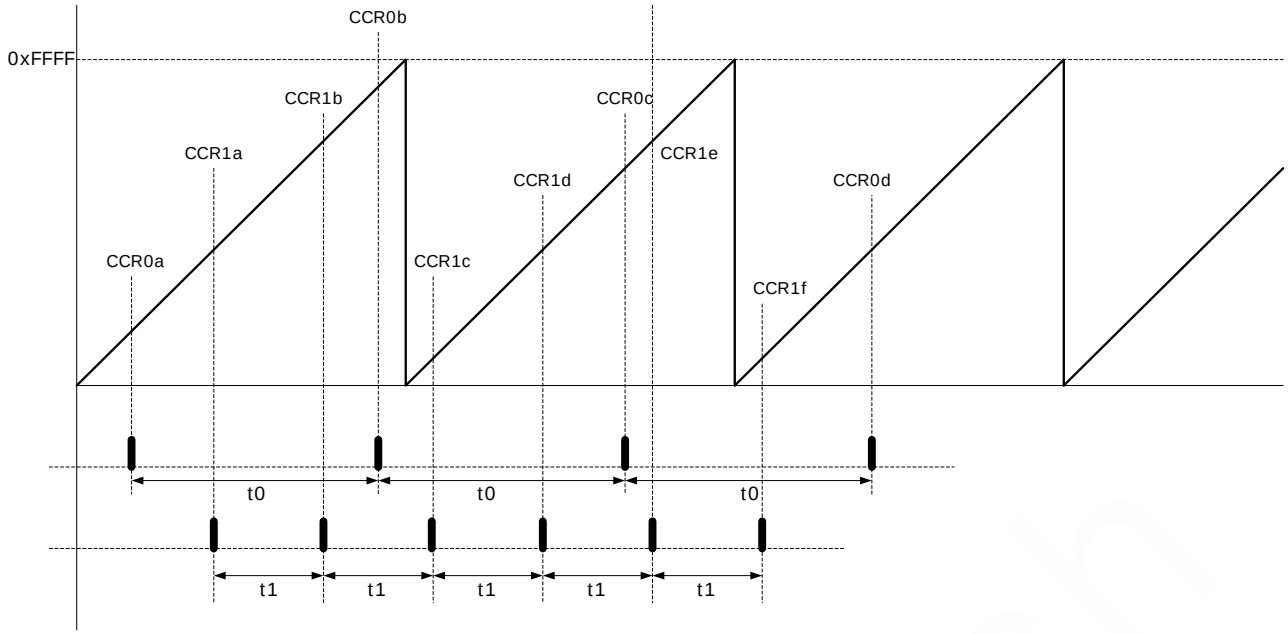

Figure 20-4 Example of Continuous Mode

In the above diagram, CCR0a or CCR1a is the CCR0 or CCR1 at Ta0 or Ta1, CCR0b or CCR1b is the CCR0 or CCR1 at Tb0 or Tb1. (Tb0=Ta0+t0, Tb1=Ta1+t1)

The above diagram shows that under continuous mode, user can use CCIFG (bit 0 of CCTLx) and CCIE (bit 4 of CCTLx) to generate a regulator interrupt by setting CCR0a and CCR1a to assert interrupt when TAR=CCR0a or TAR=CCR1a. And when TAR=CCR0b or TAR=CCR1b, it can generate another interrupt with different period. The t0 and t1 can be totally independent, so at most user can set 3 totally independent interrupt with one single PWM timer. Under this mode, the IFG flag will be set when the timer count from 0xFFFF to 0x0.

20.5.6. PWMx_CCTLx Register

Table 20-8 Description of PWMx_CCTLx Register

Bit	Name	Type	Description	Default
31:10	-	-	Reserved.	0
9	OUTEN	R/W	OUTx output enable control register. 0: OUTx output disable 1: OUTx output enable	0x0
8			Reserved.	0x0
7:5	OUTMOD	R/W	Output mode selection. 0: Constant mode, OUTx output the value of OUT bit. 1: Set mode, OUTx will be set to 1 when TAR=CCRx (x=0~2). 2: Toggle/Reset mode, OUTx will be toggled when	0x0

			TAR=CCRx (x=1~2), and will be reset to 0 when TAR=CCR0. This mode can't be used on OUT0. 3: Set/Reset mode, OUTx will be set to 1 when TAR=CCRx (x=1~2), and will be reset to 0 when TAR=CCR0. This mode can't be used on OUT0. 4: Toggle mode, OUTx will be toggled when TAR=CCRx (x=0~2). 5: Reset mode, OUTx will be reset to 0 when TAR=CCRx (x=0~2). 6: Toggle/set mode, OUTx will be toggled when TAR=CCRx (x=1~2), and will be set to 1 when TAR=CCR0. This mode can't be used on OUT0. 7: Reset/set mode, OUTx will be reset to 0 when TAR=CCRx (x=1~2), and will be set to 1 when TAR=CCR0. This mode can't be used on OUT0.	
4	CCIE	R/W	Compare interrupt enable register.	0x0
3	-	-	Reserved.	
2	OUT	R/W	This bit is used to control the output value of OUTx when OUTMOD is set to 0.	0x0
1	-	-	Reserved.	0
0	CCIFG	R/C	Under compare mode, this bit will be set when TAR=CCRx. This bit can be cleared only when write 1 to this bit.	0x0

The following figure shows the PWM output under up-mode.

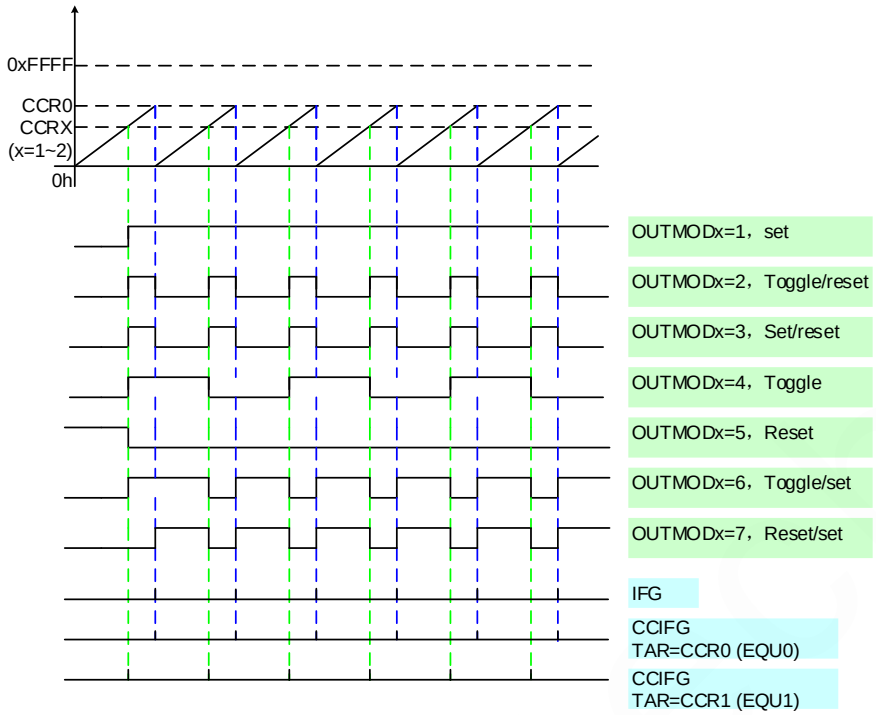

Figure 20-5 PWM Output under Up-count Mode

The following figure shows the PWM output under continuous-mode.

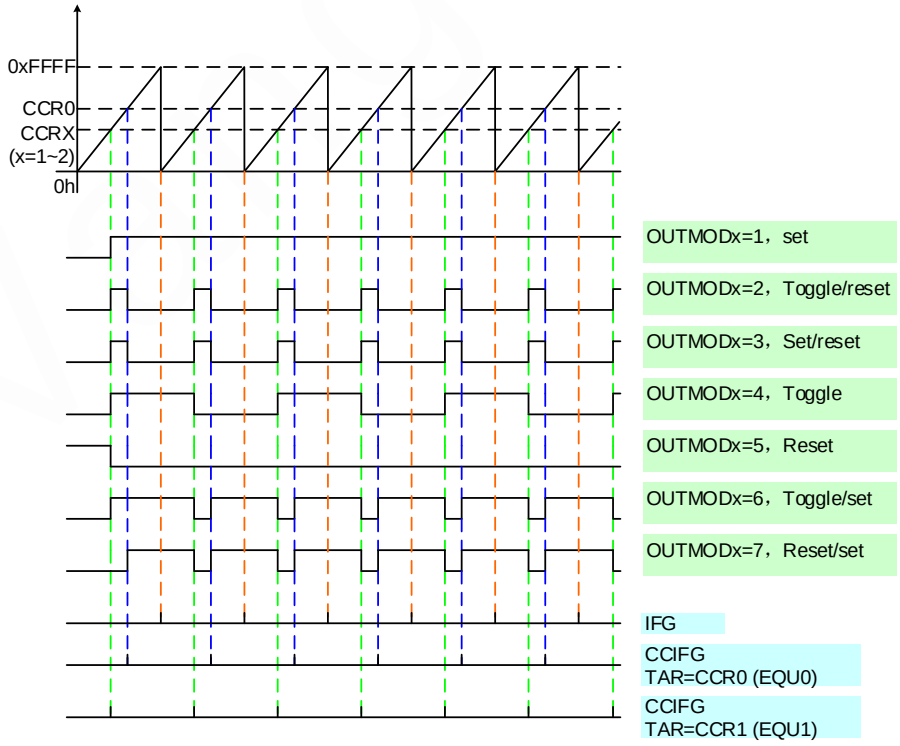

Figure 20-6 PWM Output under Continuous Mode

The following figure shows the PWM output under up/down count mode.

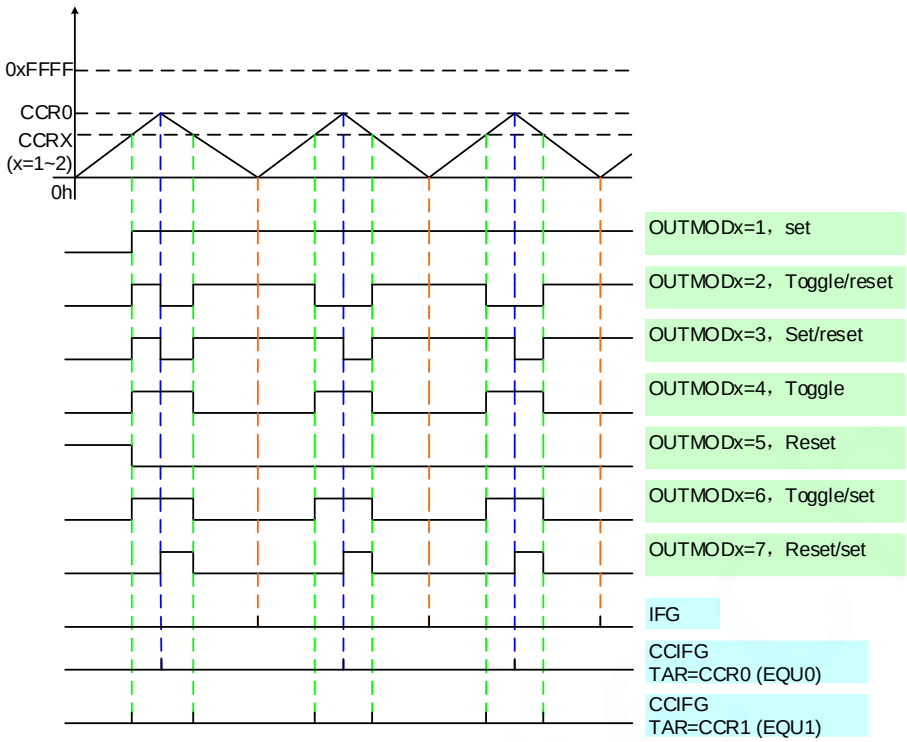

Figure 20-7 PWM Output under Up/down Count Mode

20.5.7. PWMx_CCRx Register

Table 20-9 Description of PWMx_CCRx Register

Bit	Name	Type	Description	Default
31:16	-	-	Reserved.	0
15:0	CCRx	R/W	Compare data register. This register is used to compare with TAR to generate PWM output.	0x0

20.5.8. PWM_O_SEL Register

Table 20-10 Description of PWM_O_SEL Register

Bit	Name	Type	Description	Default
31:16	-	-	Reserved.	0
15:12	O_SEL3	R/W	External output PWM3's output selection register. Same definition as O_SEL0	0xD
11:8	O_SEL2	R/W	External output PWM2's output selection register. Same definition as O_SEL0	0xB

7:4	O_SEL1	R/W	External output PWM1's output selection register. Same definition as O_SEL0	0x5
3:0	O_SEL0	R/W	External output PWM0's output selection register. 0: From PWM0's OUT0 1: From PWM0's OUT1 2: From PWM0's OUT2 4: From PWM1's OUT0 5: From PWM1's OUT1 6: From PWM1's OUT2 8: From PWM2's OUT0 9: From PWM2's OUT1 10: From PWM2's OUT2 12: From PWM3's OUT0 13: From PWM3's OUT1 14: From PWM3's OUT2 Others: Reserved.	0x1

21. LCD Controller

21.1. Introduction

The LCD controller is used to display content on the LCD panel. The LCD controller supports 4 COMs or 6COMs and 8 COMs mode, and maximum 78 segments. There are two frame buffers inside the LCD controller, which support automatically switch function. The setting in GPIO controller will be reset after wake-up from deep-sleep mode, programmer should restore the setting manually after wake-up from deep-sleep mode.

21.2. Feature

--Support 4, 6 or 8 COMs mode.

--Support maximum 4 COMs×78 SEGs, 6 COMs×76 SEGs or 8 COMs×74 SEGs.

--Support 1/3 Bias or 1/4 Bias modes

--Bias voltage generated by an individual 3.3V LDO, and can be adjusted from 3.6V-2.7V with resolution of 60mV/LSB

--An internal resistor ladder to generate the LCD waveform voltages--LCD scan frequency generated by the RTCCLK clock

--Two frame buffers which support automatically switch function.

--Adjustable frame rate.

21.3. Block Diagram

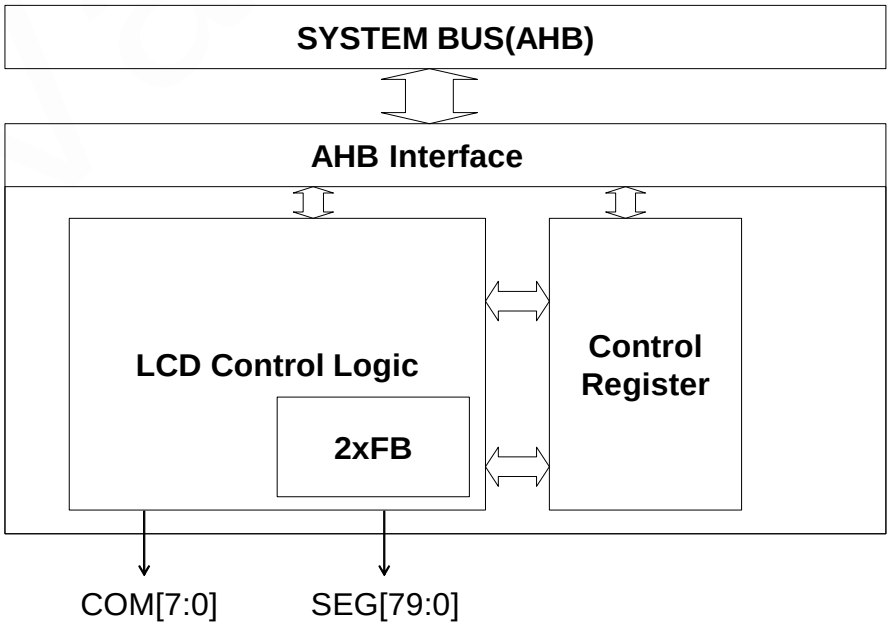

Figure 21-1 Functional Block Diagram of LCD Controller

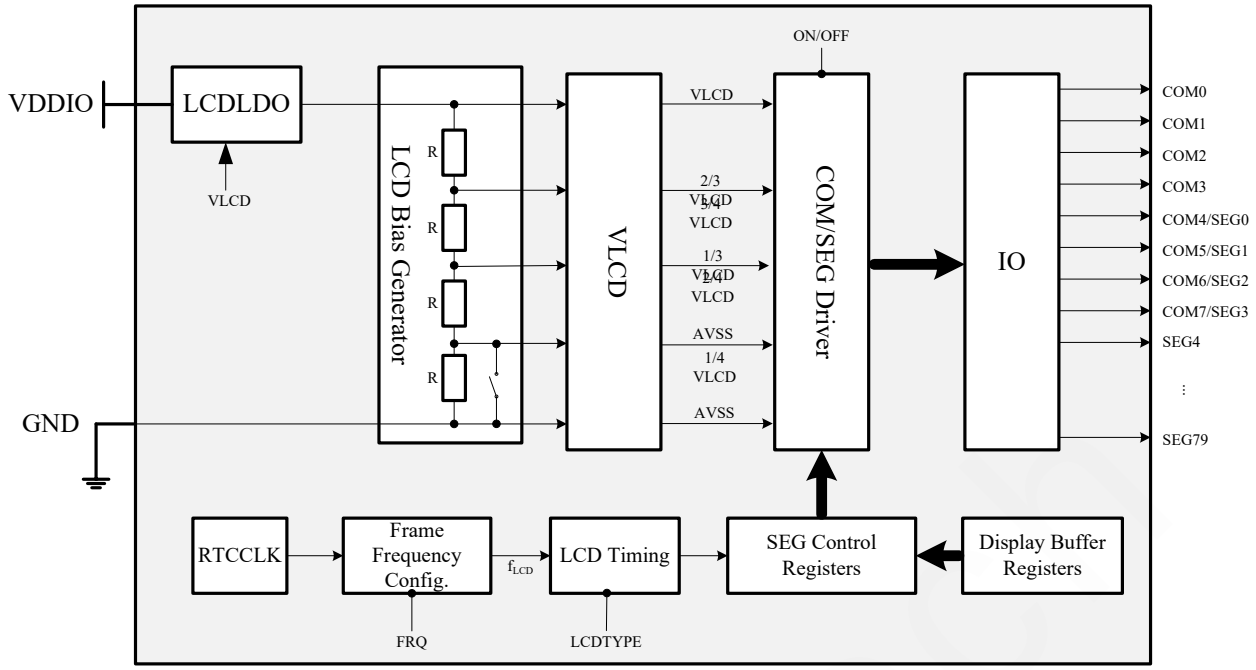

Figure 21-2 LCD Controller Structure Diagram

21.4. LCD Timing

In the V94XX, the CLK, sourced by the 32.768 kHz RTCCLK clock, provides the LCD driver with clock pulse for timing generation. Generally, the crystal oscillator keeps on running until it is powered off, so the LCD driver keeps on working even in Sleep (not Deep Sleep) state unless CLK is disabled. When the crystal stops running anomaly when power is still on, the internal RC clock will become the replacement of the XTAL clock to source the LCD driver until the crystal is stimulated to run again.

The CLK frequency is divided to generate frame frequency for the waveform. The MCU can configure bit[1:0] of LCD_CTRL to select the appropriate frame frequency. By default it is 64Hz.

21.5. LCD Waveform Voltage

In the V94XX, the bias voltage of LCD driver is generated by an individual 3.3V LDO, and an internal resistor ladder is designed to generate LCD waveform voltage (VLCD). Users can adjust the waveform voltage via bits VLCD[3:0](bit[4:1] of ANA_REG6).

21.6. LCD Operating Current

Users can adjust the resistance value of each resistor in the resistor ladder of the bias voltage generation circuits via bits DRV[1:0] (bit[3:2] of LCD_CTRL) to adjust the current through the circuits to change the lightness of the display panel. By default, the resistance value is 300 kΩ.

21.7. LCD Drive Waveform

There are 4 resistors in series in the bias voltage generation circuit, which can be configured to work in 1/3 bias mode or 1/4 bias mode. Users can configure bit LCD_BMOD (bit0 of ANA_REG6) to disable or enable one resistor in the bias voltage generation circuit to enable the LCD driver to work in 1/3 bias mode or 1/4 bias mode.

Vangotech

When an LCD panel of 1/4 duty 1/3 bias is applied, the LCD drive waveform is depicted in the following figure.

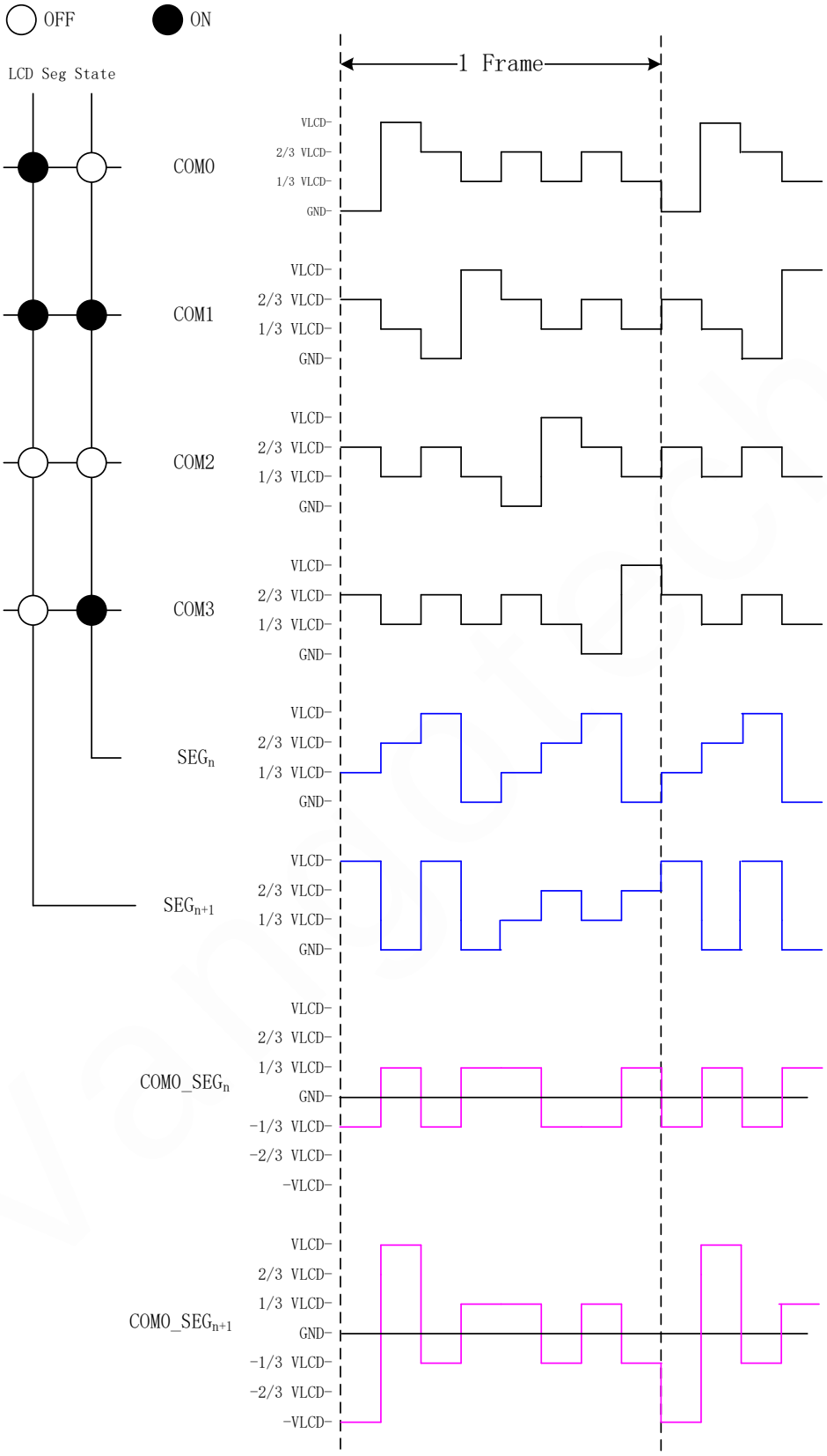

Figure 21-3 LCD Drive Waveform of 1/4 Duty and 1/3 Bias

When LCD panel of 1/6 duty and 1/3 bias is applied, the LCD drive waveform is depicted in the following figure.

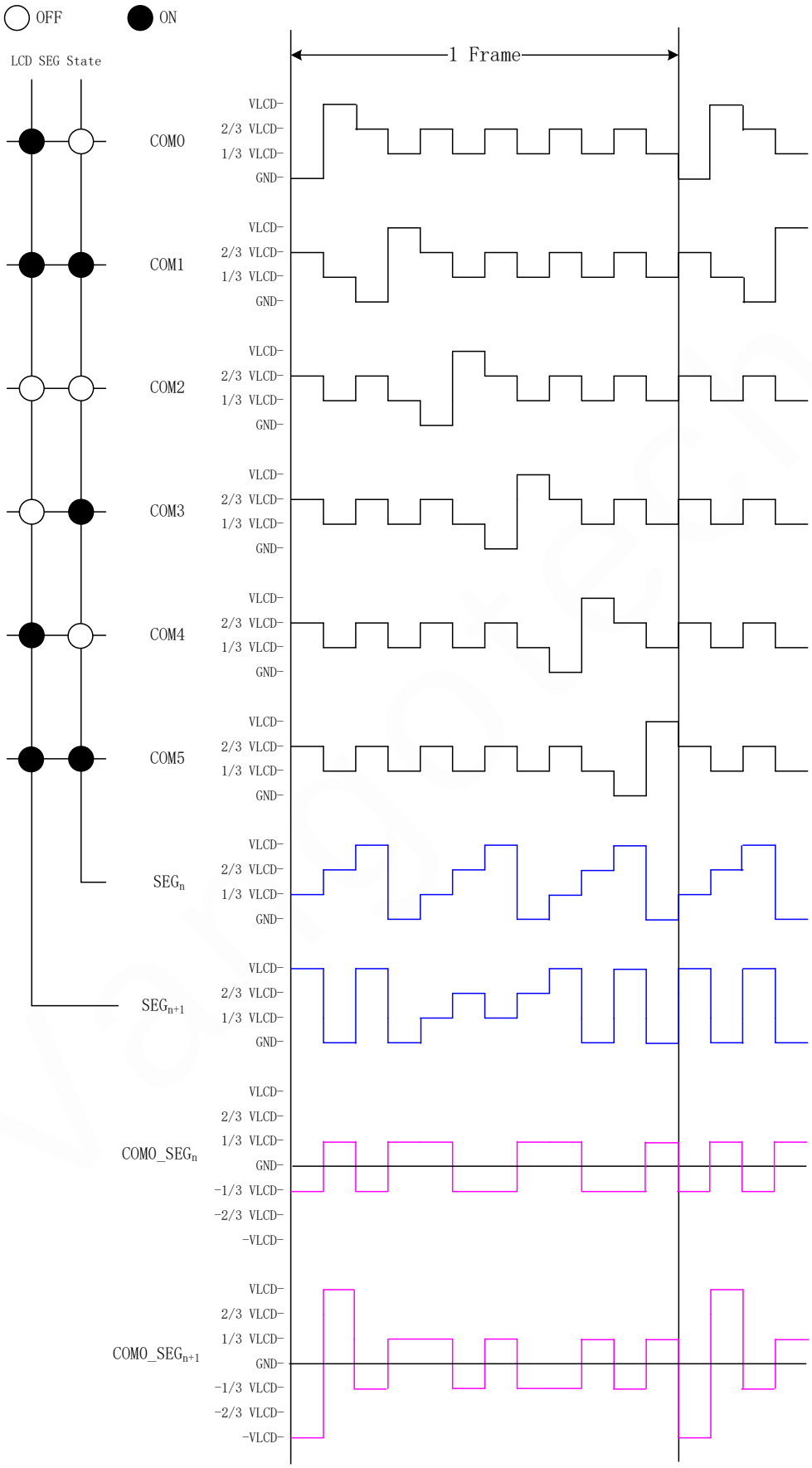

Figure 21-4 LCD Drive Waveform of 1/6 Duty and 1/3 Bias

When an LCD panel of 1/8 duty and 1/3 bias is applied, the LCD drive waveform is depicted in the following figures.

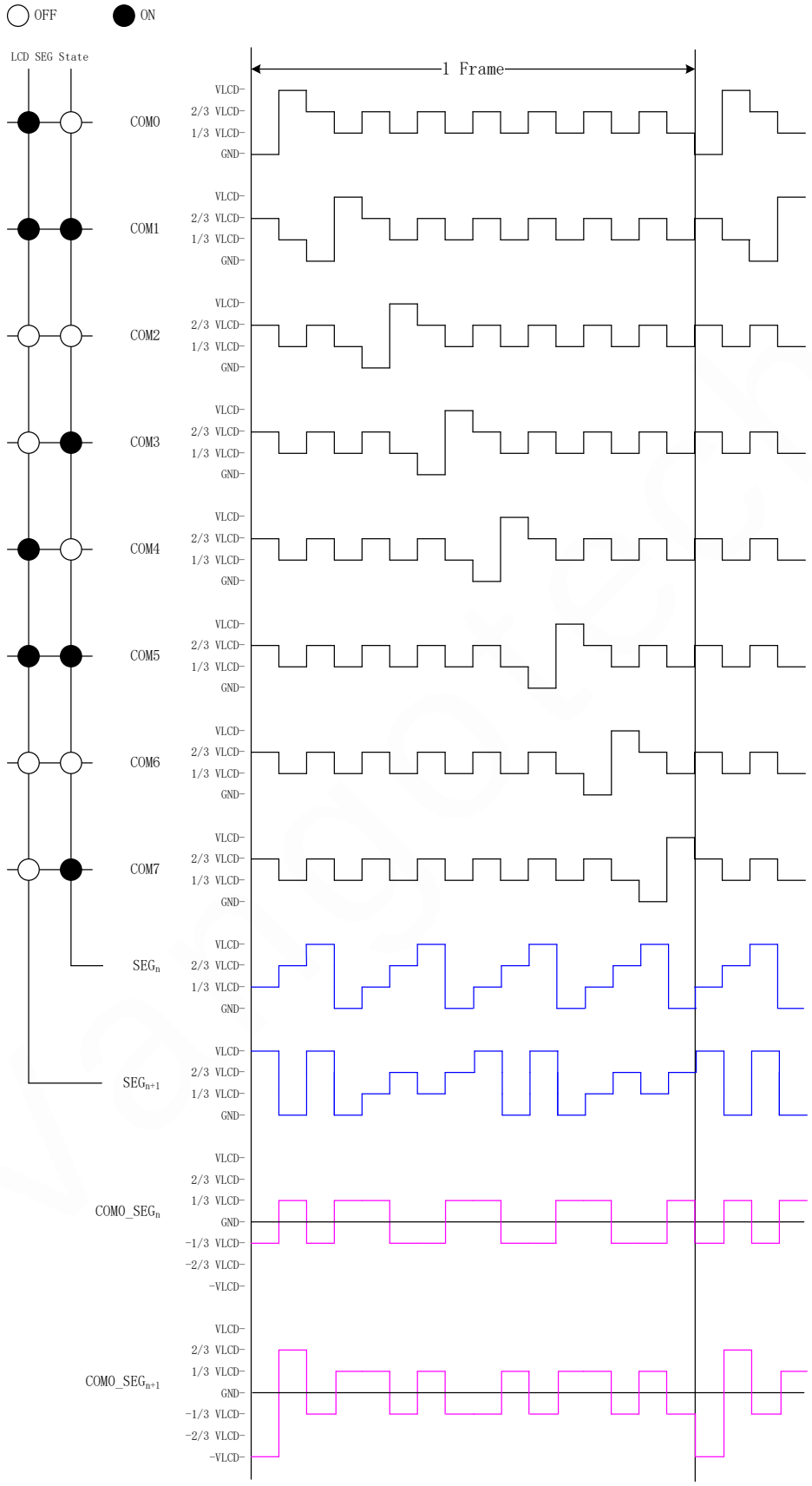

Figure 21-5 LCD Drive Waveform of 1/8 Duty and 1/3 Bias

When an LCD panel of 1/8 duty and 1/4 bias is applied, the LCD drive waveform is depicted in the following figures.

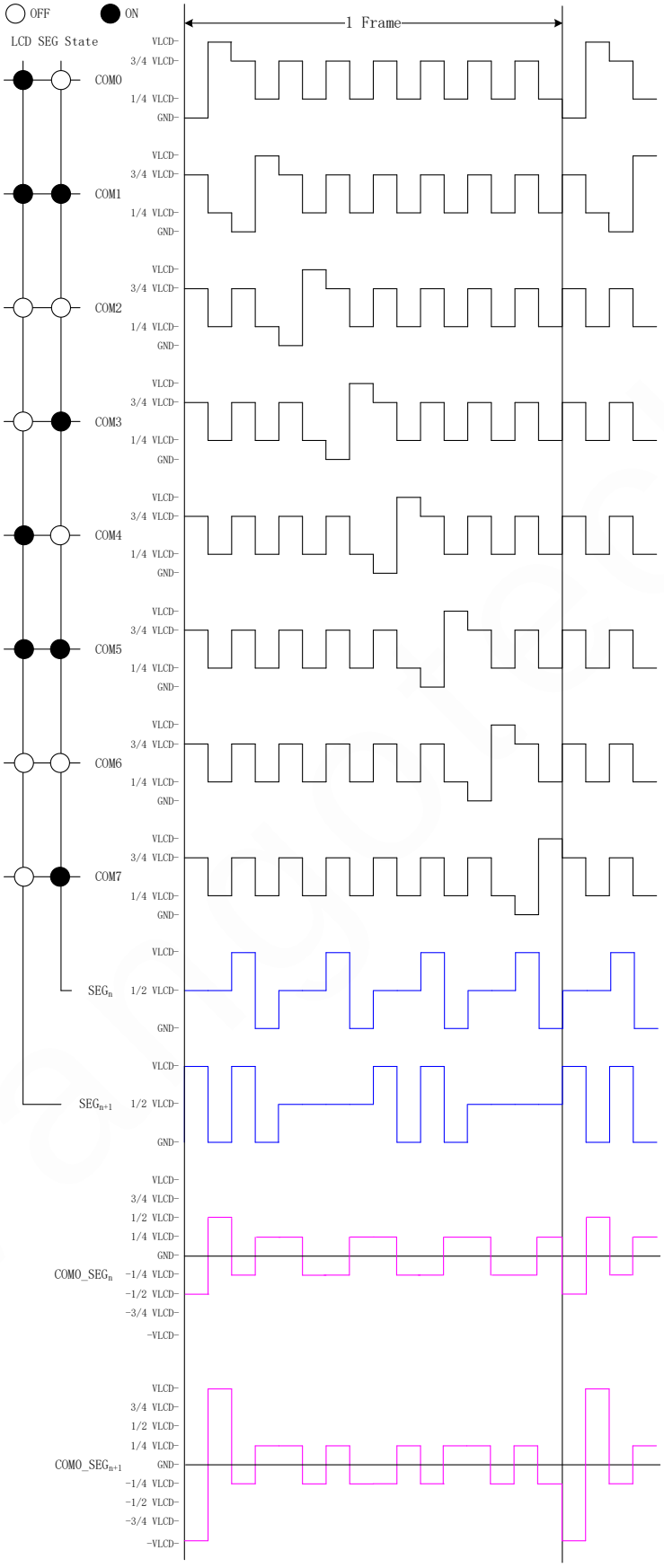

Figure 21-6 LCD Drive Waveform of 1/8 Duty and 1/4 Bias

21.8. Register Location

Table 21-1 Register Location of ANA Controller for LCD (ANA Base: 0x40014200)

Name	Type	Address	Description	Default
ANA_REG6	R/W	0x0018	Analog control register 6	0x00

Table 21-2 Register Location of LCD Controller (LCD Base: 0x40002000)

Name	Type	Address	Description	Default
LCD_FB00	R/W	0x0000	LCD Frame buffer 0 register	--
LCD_FB01	R/W	0x0004	LCD Frame buffer 1 register	--
LCD_FB02	R/W	0x0008	LCD Frame buffer 2 register	--
LCD_FB03	R/W	0x000C	LCD Frame buffer 3 register	--
LCD_FB04	R/W	0x0010	LCD Frame buffer 4 register	--
LCD_FB05	R/W	0x0014	LCD Frame buffer 5 register	--
LCD_FB06	R/W	0x0018	LCD Frame buffer 6 register	--
LCD_FB07	R/W	0x001C	LCD Frame buffer 7 register	--
LCD_FB08	R/W	0x0020	LCD Frame buffer 8 register	--
LCD_FB09	R/W	0x0024	LCD Frame buffer 9 register	--
LCD_FB0A	R/W	0x0028	LCD Frame buffer 10 register	--
LCD_FB0B	R/W	0x002C	LCD Frame buffer 11 register	--
LCD_FB0C	R/W	0x0030	LCD Frame buffer 12 register	--
LCD_FB0D	R/W	0x0034	LCD Frame buffer 13 register	--
LCD_FB0E	R/W	0x0038	LCD Frame buffer 14 register	--
LCD_FB0F	R/W	0x003C	LCD Frame buffer 15 register	--
LCD_FB10	R/W	0x0040	LCD Frame buffer 16 register	--
LCD_FB11	R/W	0x0044	LCD Frame buffer 17 register	--
LCD_FB12	R/W	0x0048	LCD Frame buffer 18 register	--
LCD_FB13	R/W	0x004C	LCD Frame buffer 19 register	--
LCD_FB14	R/W	0x0050	LCD Frame buffer 20 register	--
LCD_FB15	R/W	0x0054	LCD Frame buffer 21 register	--
LCD_FB16	R/W	0x0058	LCD Frame buffer 22 register	--

LCD_FB17	R/W	0x005C	LCD Frame buffer 23 register	--
LCD_FB18	R/W	0x0060	LCD Frame buffer 24 register	--
LCD_FB19	R/W	0x0064	LCD Frame buffer 25 register	--
LCD_FB1A	R/W	0x0068	LCD Frame buffer 26 register	--
LCD_FB1B	R/W	0x006C	LCD Frame buffer 27 register	--
LCD_FB1C	R/W	0x0070	LCD Frame buffer 28 register	--
LCD_FB1D	R/W	0x0074	LCD Frame buffer 29 register	--
LCD_FB1E	R/W	0x0078	LCD Frame buffer 30 register	--
LCD_FB1F	R/W	0x007C	LCD Frame buffer 31 register	--
LCD_FB20	R/W	0x0080	LCD Frame buffer 32 register	--
LCD_FB21	R/W	0x0084	LCD Frame buffer 33 register	--
LCD_FB22	R/W	0x0088	LCD Frame buffer 34 register	--
LCD_FB23	R/W	0x008C	LCD Frame buffer 35 register	--
LCD_FB24	R/W	0x0090	LCD Frame buffer 36 register	--
LCD_FB25	R/W	0x0094	LCD Frame buffer 37 register	--
LCD_FB26	R/W	0x0098	LCD Frame buffer 38 register	--
LCD_FB27	R/W	0x009C	LCD Frame buffer 39 register	--
LCD_CTRL	R/W	0x0100	LCD control register	0x00
LCD_CTRL2	R/W	0x0104	LCD control register 2	0x0000
LCD_SEGCTRL0	R/W	0x0108	LCD segment enable control register 0	0x00000000
LCD_SEGCTRL1	R/W	0x010C	LCD segment enable control register 1	0x00000000
LCD_SEGCTRL2	R/W	0x0110	LCD segment enable control register 2	0x00000000

21.9. Register Definition

21.9.1. LCD_FBx Register

Table 21-3 Description of LCD_FBx Register

Bit	Name	Type	Description	Default
31:0	DATAx	R/W	Each bit represents a data in the display array; see Table 3~6 for detail of data arrangement under different mode. These registers can do byte read or write, so programmer can use CPU or DMA to fill	--

			these registers.	

The LCD_FB00~LCD_FB13 is frame buffer A.

The LCD_FB14~LCD_FB27 is frame buffer B.

The following tables show only for frame buffer A, if FBMODE is select to 1, the frame buffer B has the same data layout as frame buffer A.

Table 21-4 Data arrangement of LCD_FBx

Register	Data bit			
	31:24	23:16	15:8	7:0
LCD_FB00	COM[7:0] of SEG3	COM[7:0] of SEG2	COM[7:0] of SEG1	COM[7:0] of SEG0
LCD_FB01	COM[7:0] of SEG7	COM[7:0] of SEG6	COM[7:0] of SEG5	COM[7:0] of SEG4
.....				
LCD_FB13	COM[7:0] of SEG79	COM[7:0] of SEG78	COM[7:0] of SEG77	COM[7:0] of SEG76

When 4 or 6 COMs mode is selected, the high bit of COM will be discarded, so the data format is the same as 8 COMs mode.

21.9.2. LCD_CTRL Register

Table 21-5 Description of LCD_CTRL Register

Bit	Name	Type	Description	Default
31:8	-	-	Reserved.	0
7	EN	R/W	LCD controller enable register. 0: Disable 1: Enable	0x0
6	-	-	Reserved.	0
5:4	TYPE	R/W	LCD type control register. 0: 4 COM mode 1: 6 COM mode 2: 8 COM mode 3: Reserved.	0x0
3:2	DRV	R/W	LCD driving resistance control register. 0: 300 kohm 1: 600 kohm 2: 150 kohm	0x0

			3: 200 kohm	
1:0	FRQ	R/W	LCD scan frequency 0: 64Hz 1: 128 Hz 2: 256Hz 3: 512Hz The scan frequency here means the scan speed of each COM, so if total COM is 4, then the overall frame rate will be this value divided by 4.	0x0

Note: If user want to switch COM type, user should disable LCD controller(bit7 of LCD_CTRL register) firstly, and then wait for a delay to ensure the current frame transmission is completed. The delay is calculated according to the current frame rate(bit7 and bit1:0 of LCD_CTRL register). For example, the current LCD scan frequency is 64Hz, and user want switch 4 COM to 6 COM, the delay is calculated as following: T_{Delay}=1/(64/4)=62.5ms

21.9.3. LCD_CTRL2 Register

Table 21-6 Description of LCD_CTRL2 Register

Bit	Name	Type	Description	Default
31:16	-	-	Reserved.	0
15:8	SWPR	R/W	Frame buffer switch period. The switch period is calculated by the following equation. 0.5 sec * (SWPR + 1).	0x0
7:6	FBMODE	R/W	LCD frame buffer switch mode control register. 0: Always show frame buffer A. 1: Switch between frame buffer A and frame buffer B. 2: Switch between frame buffer A and blank. 3: Reserved.	0x0
5			Reserved.	0
4	BKFILL	R/W	Fill value at blank period. This register is used to control the filling value during blank period.	0x0
3:0			Reserved.	0

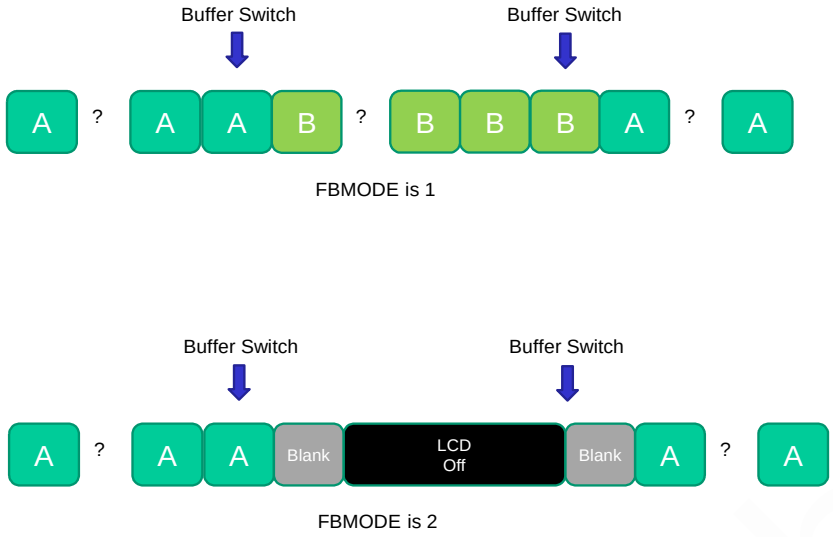

Figure 21-7 Frame buffer operation mode under different FBMODE

21.9.4. LCD_SEGCTRL0 Register

Table 21-7 Description of LCD_SEGCTRL0 Register

Bit	Name	Type	Description	Default
31:0	SEGCTRL	R/W	Each bit control the SEG0~SEG31's LCD signal enable. Bit 0: SEG 0's enable control. Bit 1: SEG 1's enable control. .... Bit 31: SEG 31's enable control. 0: Disable SEG's output. 1: Enable SEG's output.	0x00000000

21.9.5. LCD_SEGCTRL1 Register

Table 21-8 Description of LCD_SEGCTRL1 Register

Bit	Name	Type	Description	Default
31:0	SEGCTRL	R/W	Each bit control the SEG32~SEG63's LCD signal enable. Bit 0: SEG 32's enable control. Bit 1: SEG 33's enable control.	0x00000000

			…. Bit 31: SEG 63's enable control. 0: Disable SEG's output. 1: Enable SEG's output.	

21.9.6. LCD_SEGCTRL2 Register

Table 21-9 Description of LCD_SEGCTRL2 Register

Bit	Name	Type	Description	Default
31:16	-	-	Reserved.	0
15:0	SEGCTRL	R/W	Each bit control the SEG64~SEG79's LCD signal enable. Bit 0: SEG 64's enable control. Bit 1: SEG 65's enable control. …. Bit 15: SEG 79's enable control. 0: Disable SEG's output. 1: Enable SEG's output.	0x00000000

21.9.7. ANA_REG6 Register

Table 21-10 Description of each bit in ANA_REG6

Bit	Name	Function	Notes
0	LCD_BMODE	LCD BIAS mode selection	0: 1/3 bias; 1: 1/4 bias.
4:1	VLCD[3:0]	LCD driving voltage	When VLCD=0:default When VLCD=0~5: adjust range =+60mV*VLCD When VLCD=6~15: adjust range =-60mV* (VLCD-5)

For Each COM and SEG, before enable the corresponding pin's LCD function, programmer should disable corresponding IO input and output function manually, and disable all special function of the corresponding IO to ensure LCD function work correctly.

22. SPI Controller

22.1. Introduction

Two independent Serial Peripheral Interface (SPI) controllers are built in V94XX to facilitate communicating with other devices and components. The setting in SPI controller will be reset after wake-up from sleep or deep-sleep mode, programmer should restore the setting manually after wake-up from these two states. The SPICLK range supported by SPI host mode is APBCLK /2/4/8/16/32/64/128. The maximum SPICLK clock supported by SPI slave mode is APBCLK /2.

22.2. Features

--Support both master and slave mode.

--Support single byte and consecutive bytes transferring.

--Support receive overrun error indication

--Support transmitting / receiving interrupt request

--Programmable phase and polarity of master clock

--Selectable data sampling time (end or middle of clock period)

--Programmable master SCK clock frequency: APB Clock / 2, / 4, /8, /16, /32, /64, /128

--Built-in 8-depth 8-bits FIFO in both transmit and receive direction, the interrupt level of these two FIFOs is both programmable.

22.3. Block Diagram

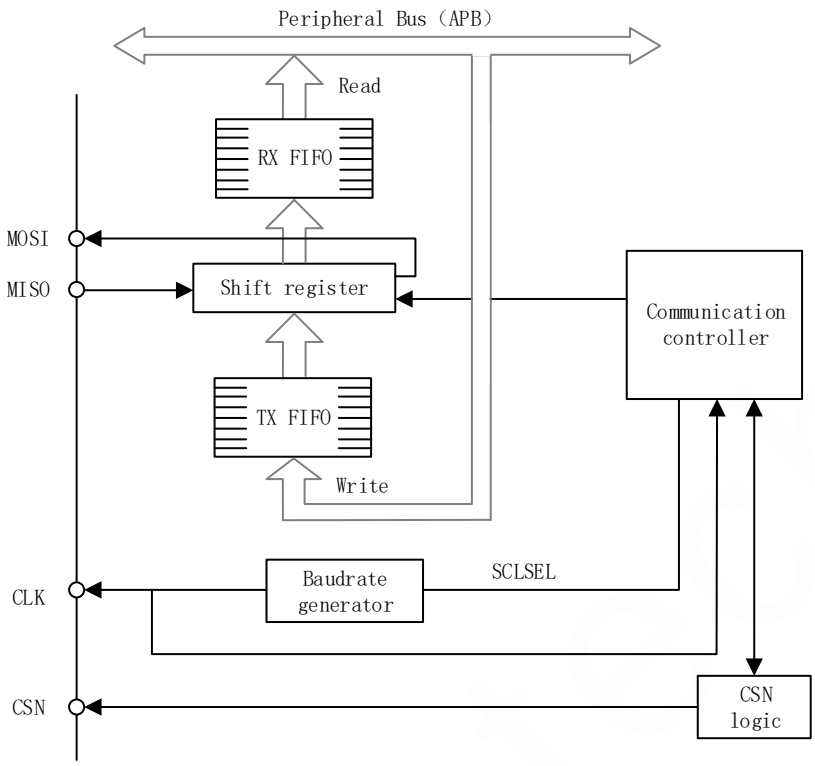

Figure 22-1 Functional Block Diagram of SPI Controller

Usually, the SPI is connected to the external device by 4 pins.

MOSI: The output pin in master mode/the input pin in slave mode. In general, MOSI is used to send data in master mode and receive data in slave mode.

MISO: The input pin in master mode/the output pin in slave mode. In general, MISO is used to receive data in master mode and send data in slave mode.

CLK: SPI serial clock pin, and controlled by master.

CSN: Slave chip select pin, According to the setting of SPI and CSN, CSN can be used as following:

--Select a slave to communication.

--Synchronous data frame.

Note: The maximum SPICLK clock supported by SPI slave mode is 1/2 APBCLK.

22.4. Register Location

Table 22-1 Register Location of SPI1 Controller (SPI1 Base: 0x40011000)

Name	Type	Address	Description	Default
SPI1_CTRL	R/W	0x0000	SPI1 Control Register	0x0000
SPI1_TXSTS	R/W	0x0004	SPI1 Transmit Status Register	0x8200

SPI1_TXDAT	R/W	0x0008	SPI1 Transmit FIFO register	--
SPI1_RXSTS	R/W	0x000C	SPI1 Receive Status Register	0x0000
SPI1_RXDAT	R	0x0010	SPI1 Receive FIFO Register	--
SPI1_MISC	R/W	0x0014	SPI1 Misc. Control Register	0x0003

Table 22-2 Register Location of SPI2 Controller (SPI2 Base: 0x40015800)

Name	Type	Address	Description	Default
SPI2_CTRL	R/W	0x0000	SPI2 Control Register	0x0000
SPI2_TXSTS	R/W	0x0004	SPI2 Transmit Status Register	0x8200
SPI2_TXDAT	R/W	0x0008	SPI2 Transmit FIFO register	--
SPI2_RXSTS	R/W	0x000C	SPI2 Receive Status Register	0x0000
SPI2_RXDAT	R	0x0010	SPI2 Receive FIFO Register	--
SPI2_MISC	R/W	0x0014	SPI2 Misc. Control Register	0x0003

22.5. Register Definition

22.5.1. SPIx_CTRL Register

The SPIx_CTRL register is used to control the SPIx controller's behavior.

Table 22-3 Description of SPIx_CTRL Register

Bit	Name	Type	Description	Default
15	SPIEN	R/W	SPI enable For SPI1 engine if this bit is set to "1", IOB[12:9] becomes SPI1 Interface. These pins cannot be used as GPIO. Therefore, any further corresponding setting on the selected GPIOs will be no effect. For SPI2 engine, if this bit is set to 1, IOC[3:0] becomes SPI2 interface. 0: Disabled 1: Enabled	0x0
14:12			Reserved.	0
11	SPIRST	W	SPI Soft Reset. If this bit is written by "1", the state machine of SPI controller and FIFO pointer will return to the original value.	

			0: No effect 1: Reset SPI Controller	
10	CSGPIO	R/W	SPI CS pin is controlled by GPIO or H/W. For Master mode. 0: SPI CS pin control by SPI H/W. 1: SPI CS pin control by GPIO setting. For Slave mode. 0: SPI CS pin is controlled by external master. 1: SPI CS pin is connected to logic 0.	0x0
9	SWAP	R/W	SPI MISO/MOSI swap control register. 0: No swap MISO/MOSI 1: Swap MISO/MOSI.	0x0
8	MOD	R/W	SPI Mode Selection register 0: Master mode 1: Slave mode	0x0
7:6			Reserved.	0
5	SCKPHA	R/W	SPI clock phase, refer to timing scheme on following section.	0x0
4	SCKPOL	R/W	SPI clock polarity, refer to timing scheme on following section.	0x0
3			Reserved.	0
2:0	SCKSEL	R/W	Master mode clock selection 000: APBCLK / 2 001: APBCLK / 4 010: APBCLK / 8 011: APBCLK / 16 100: APBCLK / 32 101: APBCLK / 64 110: APBCLK / 128 111: Reserved.	0x0

22.5.2. SPIx_TXSTS Register

The SPIx_TXSTS register is used to control the SPIx transmit FIFO and related interrupt.

Table 22-4 Description of SPIx_TXSTS Register

Bit	Name	Type	Description	Default
31:16	-	-	Reserved.	0
15	SPITXIF	R/C	SPI Transmit Interrupt flag. This bit is set to "1" by hardware when the transmit FIFO level is lower than the value set by the user. When SMART is set in SPI_MISC register, the bit will be cleared as long as the transmit FIFO level is high than interrupt level, else you should write "1" to this control bit to clear this flag. Read 0: Not Occurred Read 1: Occurred Write 0: No effect Write 1: Clear the flag	0x1
14	SPITXIEN	R/W	SPI Transmit Interrupt Enable If this bit is set to "1", and SPI interrupt (when 8-bit TX FIFO level in lower then interrupt level) occurs, hardware will issue an interrupt to CPU. If this bit is cleared to "0", this interrupt will be masked. 0: Disabled 1: Enabled	0x0
13:10			Reserved.	0
9	TXEMPTY	R	Transmit FIFO empty register. This bit will be set by hardware when the transmit FIFO is empty. And will be clear by hardware when the transmit FIFO is not empty. 0: Not Empty 1: Empty	0x1
8	TXFUR	R	Transmit FIFO under run register This will be set when transmit FIFO is empty and more data is requested by external SPI master, this bit will be set only at SPI slave mode. This bit will be cleared when programmer write 1 to SPITXIF flag.	0x0

7			Reserved.	0
6:4	TXFLEV	R/W	Transmit FIFO interrupt level register. This register is used to indicated how much bytes is stored in transmit FIFO when issued interrupt. The lower value is set, the lower interrupt penalty you have. Since you can write more data in one interrupt. FIFO Full Interrupt issue timing 000: data no. in FIFO <1, 8 write is allowed. 001: data no. in FIFO <2, 7 write is allowed. 010: data no. in FIFO <3, 6 write is allowed. 011: data no. in FIFO <4, 5 write is allowed. 100: data no. in FIFO <5, 4 write is allowed. 101: data no. in FIFO <6, 3 write is allowed. 110: data no. in FIFO <7, 2 write is allowed. 111: data no. in FIFO <8, 1 write is allowed.	0x0
3			Reserved	0
2:0	TXFFLAG	R	Transmit FIFO Data Level. The register is used to indicate how much data is still in the FIFO. 0000: No data in FIFO or 8 bytes in FIFO. 0001: 1 byte in FIFO. 0010: 2 bytes in FIFO. 0011: 3 bytes in FIFO. 0100: 4 bytes in FIFO. 0101: 5 bytes in FIFO. 0110: 6 bytes in FIFO. 0111: 7 bytes in FIFO.	0x0

22.5.3. SPIx_TXDAT Register

The SPIx_TXDAT register is used to write data to transmit FIFO of SPIx engine and shift out to external master or slave.

Table 22-5 Description of SPIx_TXDAT Register

Bit	Name	Type	Description	Default

31:8	-	-	Reserved.	0
7:0	SPITXD	W	Write data to SPI Transmit FIFO.	--

22.5.4. SPIx_RXSTS Register

The SPIx_RXSTS register is used to control the SPIx receive FIFO and related interrupt. Table 18-5 shows the bit assignment of SPIx_RXSTS register.

Table 22-6 Description of SPIx_RXSTS Register

Bit	Name	Type	Description	Default
31:16	-	-	Reserved.	0
15	SPIRXIF	R/C	SPI Receive Interrupt flag. This bit is set to "1" by hardware when the receive FIFO level is higher than the value set by the user. When SMART is set in SPI_MISC register, the bit will be cleared as long as the receive FIFO level is lower than interrupt level, else you should write "1" to this control bit to clear this flag. Read 0: Not Occurred Read 1: Occurred Write 0: No effect Write 1: Clear the flag	0x0
14	SPIRXIEN	R/W	SPI Receive Interrupt Enable. If this bit is set to "1", and SPI interrupt (when 8-bit RX FIFO level in higher than interrupt level) occurs, hardware will issue an interrupt to CPU. If this bit is cleared to "0", this interrupt will be masked. 0: Disabled 1: Enabled	0x0
13:10	-	-	Reserved.	0
9	RXFULL	R	Receive FIFO full register. This bit will be set by hardware when the receive FIFO is full. And will be clear by hardware when the receive FIFO is not full. 0: Not Full 1: Full	0x0
8	RXFOV	R	Receive FIFO over run register.	0x0

			This will be set when receive FIFO is full and more data is receive on the SPI data bus. This bit will be cleared when write 1 to SPIRXIF.	
7	-	-	Reserved.	0
6:4	RXFLEV	R/W	Receive FIFO interrupt level register. This register is used to indicated how much bytes is stored in receive FIFO when issued interrupt. The larger value is set, the lower interrupt penalty you have. Since you can read more data in one interrupt. FIFO Full Interrupt issue timing. 000: data no. in FIFO >= 1, 1 read is allowed. 001: data no. in FIFO >= 2, 2 read is allowed. 010: data no. in FIFO >= 3, 3 read is allowed. 011: data no. in FIFO >= 4, 4 read is allowed. 100: data no. in FIFO >= 5, 5 read is allowed. 101: data no. in FIFO >= 6, 6 read is allowed. 110: data no. in FIFO >= 7, 7 read is allowed. 111: data no. in FIFO >= 8, 8 read is allowed.	0x0
3	-	-	Reserved	0
2:0	RXFFLAG	R	Receive FIFO Data Level The register is used to indicate how much data is still in the FIFO. 0000: No data in FIFO or 8 bytes in FIFO 0001: 1 byte in FIFO 0010: 2 bytes in FIFO 0011: 3 bytes in FIFO 0100: 4 bytes in FIFO 0101: 5 bytes in FIFO 0110: 6 bytes in FIFO 0111: 7 bytes in FIFO	0x0

22.5.5. SPIx_RXDAT Register

The SPIx_RXDAT register is used to read data from receive FIFO of SPIx engine.

Table 22-7 Description of SPIx_RXDAT Register

Bit	Name	Type	Description	Default
31:8			Reserved.	0
7:0	SPIRXD	R	Read data from SPI Receive FIFO.	--

22.5.6. SPIx_MISC Register

The SPIx_MISC register is used to control misc. features of SPIx engine.

Table 22-8 Description of SPIx_MISC Register

Bit	Name	Type	Description	Default
31:10	-	-	Reserved.	0
9	OVER	R/W	SPI FIFO Over Write Mode This register is used to control the data will be overwrite or skipped when TX/RX FIFO is full. 0: The further write to the full FIFO will be skipped. 1: The further write to the full FIFO will overwrite the last written data in the FIFO.	0x0
8	SMART	R/W	SPI FIFO SMART Mode Register When this bit is set to "1", programmer don't need to clear the transmit/receive interrupt flag when the FIFO status is reach, programmer only needs write-to/read-from transmit/receive FIFO and let the FIFO level lower/higher than the interrupt level, and the interrupt flag will clear automatically. When DMA mode is selected, this bit must be set to 1 to ensure the DMA operation correctly. 0: Normal Interrupt Clear 1: Smart Interrupt Clear	0x0
7:5			Reserved.	0
4	BSY	R	SPI Controller Busy Flag This bit is used to indicate if the SPI controller is busy or not. 0: Idle 1: Busy	0x0
3	RFF	R	Receive FIFO Full Flag This bit is used to indicate if the SPI controller is real	0x0

			full or not. If the receive FIFO is full, that means any data read from SPI bus can't be written into the FIFO, and the RFOV bit will be set in this situation. 0: Receive FIFO not full 1: Receive FIFO full.	
2	RNE	R	Receive FIFO Not Empty Flag This bit is used to indicated if there is any data currently in the receive FIFO. 0: Receive FIFO is empty 1: Receive FIFO is not empty	0x0
1	TNF	R	Transmit FIFO Not Full Flag. This bit is used to indicated if there is any empty slots in the transmit FIFO. 0: Transmit FIFO is full, you can't write any more data into it. 1: Transmit FIFO is not full.	0x1
0	TFE	R	Transmit FIFO Empty Flag This bit is used to indicated if the transmit FIFO is empty or not. 0: Transmit FIFO is not empty. 1: Transmit FIFO is empty.	0x1

22.6. Application Note

22.6.1. Master Mode

When in master mode, the shifting clock (SPICLK) is generated by V94XX. There are two control bits to control the clock phase and polarity. The transmission starts immediately from a register writes to the SPI_TXDAT register. As long as there is data in the FIFO, the transmission will start automatically when one byte is transferred.

The SPI shifts the data from MSB to LSB through the SDO pin. The 8-bit data is shifted out after 8 SCK cycles. At the same time, the data is also shifted in through slave device SDI pin. When the transmit FIFO level is lower than the interrupt trigger level, the SPITXIF flag bit will be set; besides, a SPI interrupt will be generated if the SPITXIEN bit is set. When the receive FIFO level is higher than the interrupt trigger level, the SPIRXIF flag bit will be set; besides, a SPI interrupt will be generated if the SPIRXIEN bit is set. Programmer can read SPI data from SPI_RXDAT register.

The following diagram depicts the timing scheme on SPI master mode for different operation types (polarity control bit equals "1" or "0", phase control bit equals "1" or "0", and sample strobe control bit equals "1" or "0").

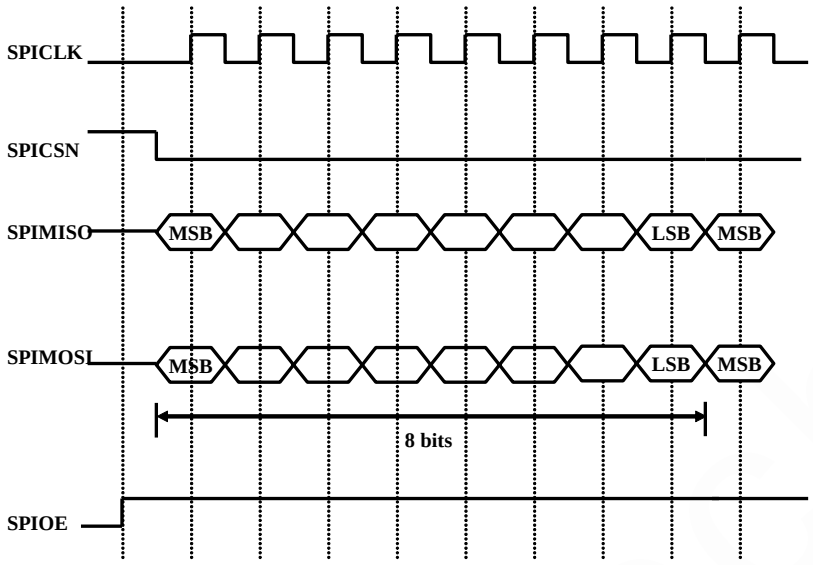

Figure 22-2Master Mode, SPO = 0, SPH=0

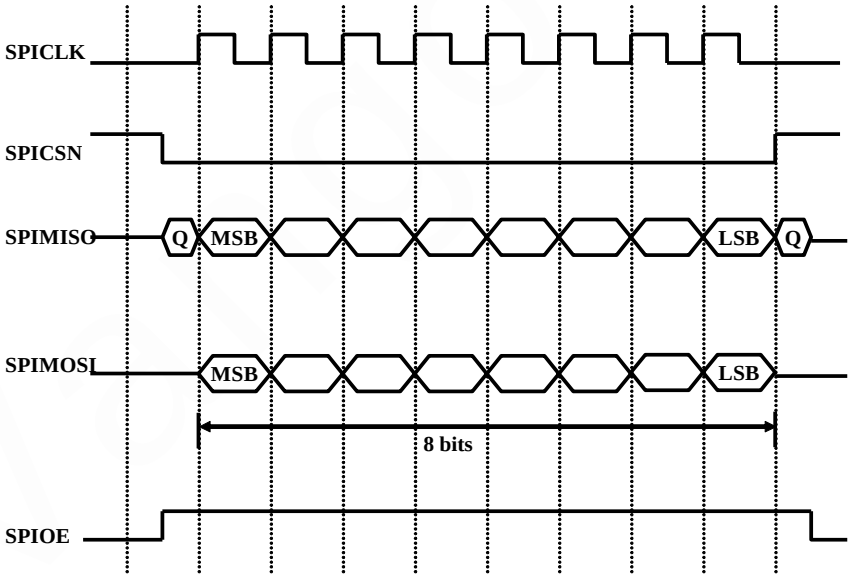

Figure 22-3 Master Mode, SPO = 0, SPH=1

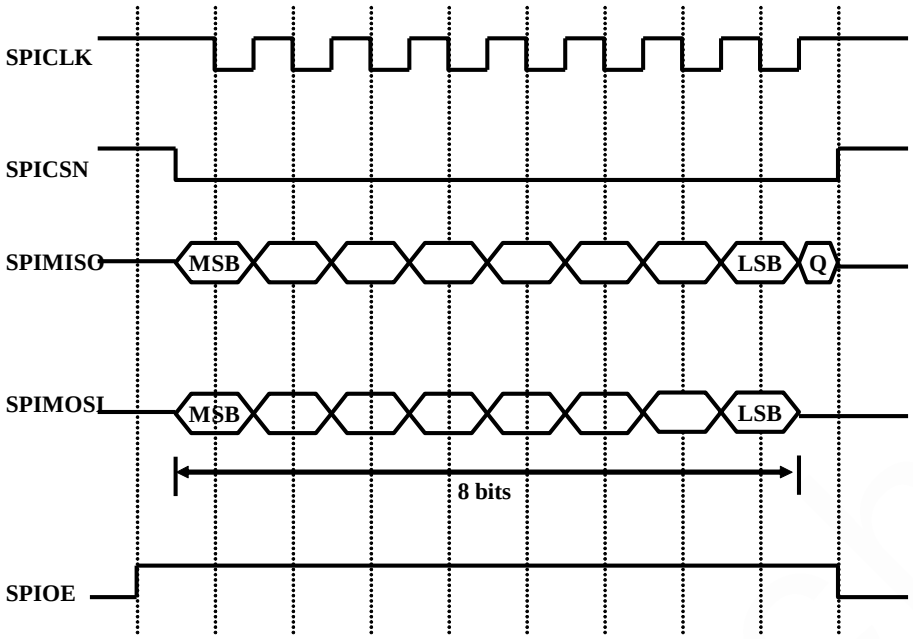

Figure 22-4 Master Mode, SPO = 1, SPH=0

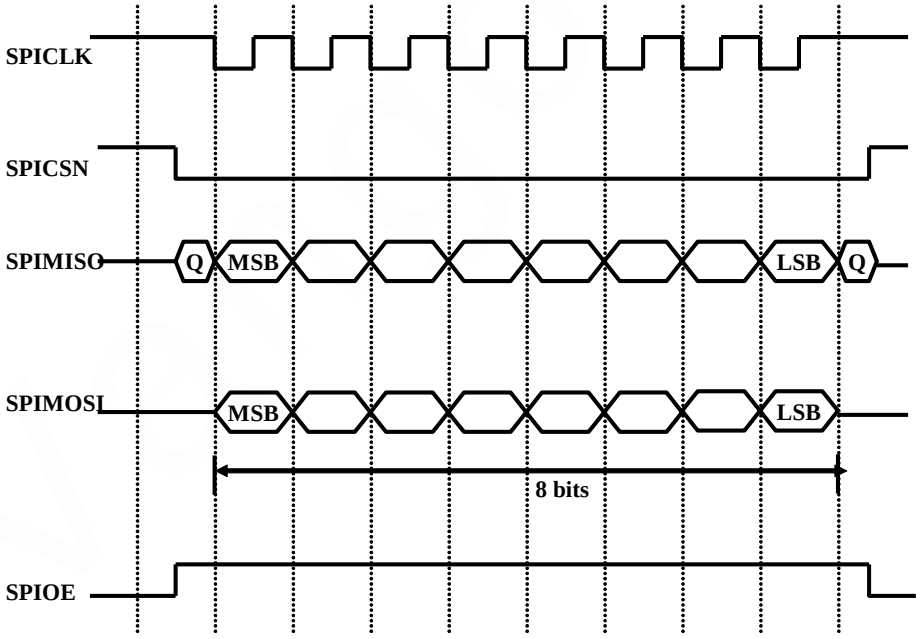

Figure 22-5 Master Mode, SPO = 1, SPH=1

22.6.2. Salve Mode

During SPI salve mode, the SPICLK and SPICSN is generated by the external master. The SPI slave mode is supported only for SPO=0 and SPH=0. The same SPI_TXDAT and SPI_RXDAT registers are used for data transmit and receive. The maximum allowed SPICLK during SPI slave mode is 1/2 APBCLK. And

DMA transfer is recommended when the receive clock is fast.

22.6.3. Consecutive Bytes Transfer

Consecutive bytes transfer is available in master and slave modes. In transmission, software is able to send the data consecutively as long as the TNF bit is 1. In reception, software will check for overrun error to monitor if there is any missing data due to the polling rate is too low.

Vangotech

23. I2C Controller

23.1. Introduction

The I2C subcomponent is the I2C Bus Controller which provides an interface that meets the Philips I2C bus specification and supports all transfer modes from and to the I2C bus. The I2C bus uses two wires to transfer information between devices connected to the bus: "scl" (serial clock line) and "sda" (serial data line). The I2C logic handles bytes transfer autonomously. It also keeps track of serial transfers, and a status register reflects the status of the I2C Bus Controller and the I2C bus. The setting in I2C controller will be reset after wake-up from sleep or deep-sleep mode, programmer should restore the setting manually after wake-up from these two states. The I2C Bus supports fSCL = 1MHz (period: 1us) and can be realized by setting the overflow frequency of timer 3.

23.2. Feature

--Master transmit/receive mode supported.

--Slave transmit/receive mode supported.

--Detection of bus arbitration fail.

--Interrupt generation.

--Programmable ACK generation.

--Programmable clock speed in master mode.

--Input de-bounce circuit.

23.3. Block Diagram

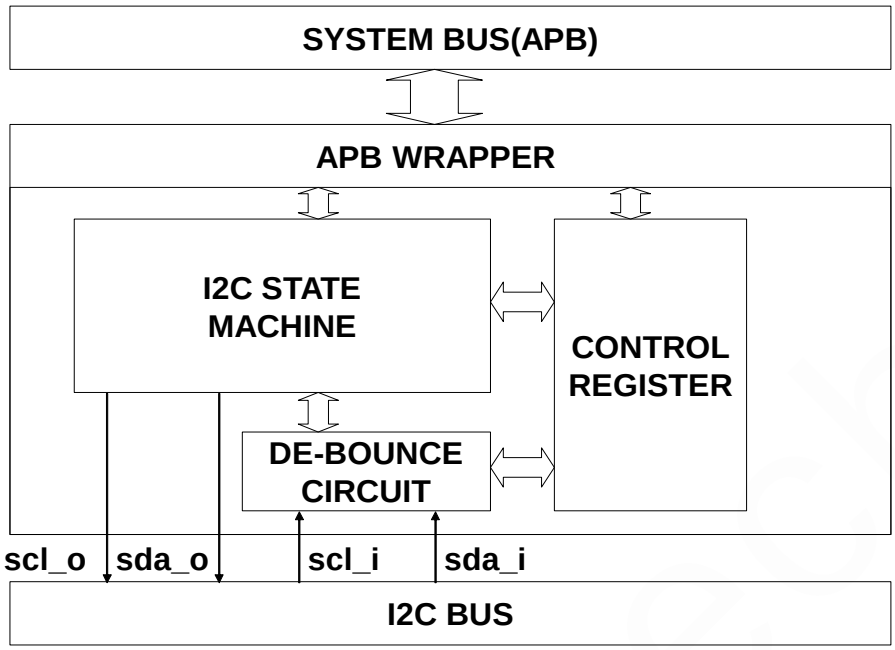

Figure 23-1 Functional Block Diagram of I2C Controller

23.4. Register Location

Table 23-1 Register Location of I2C Controller (I2C Base: 0x40010800)

Name	Type	Address	Description	Default
I2C_DATA	R/W	0x0000	I2C data register	0x00
I2C_ADDR	R/W	0x0004	I2C address register	0x00
I2C_CTRL	R/W	0x0008	I2C control/status register	0x00
I2C_STS	R	0x000c	I2C status register	0xF8
I2C_CTRL2	R/W	0x0018	I2C interrupt enable register	0x0

23.5. Register Definition

23.5.1. I2C_DATA Register

Table 23-2 Description of I2C_DATA Register

Bit	Name	Type	Description	Default
31:8	-	-	Reserved.	0

7:0	DATA	R/W	The I2C_DATA register contains a byte to be transmitted through I2C bus or a byte which has just been received through I2C bus. The CPU can read from and write to this 8-bit register while it is not in the process of byte shifting. The I2C_DATA register is not shadowed or double buffered so the user should only read I2C_DATA when an I2C interrupt occurs.	0x00

23.5.2. I2C_ADDR Register

Table 23-3 Description of I2C_ADDR Register

Bit	Name	Type	Description	Default
31:8	-	-	Reserved.	0
7:1	SLA	R/W	Own I2C slave address (7 bit)	0x00
0	GC	R/W	General Call Address Acknowledge If this bit is set, the general call address is recognized; otherwise it is ignored.	0x0

23.5.3. I2C_CTRL Register

Table 23-4 Description of I2C_CTRL Register

Bit	Name	Type	Description	Default
31:8	-	-	Reserved.	0
7	CR2	R/W	Clock rate bit 2	0x0
6	EN	R/W	I2C enable bit When EN='0' the "sdao" and "sclo" outputs are set to 1, that drives the output pads of the chip in high impedance, and "sdai" and "scli" input signals are ignored. When EN='1' I2C component is enabled and corresponded GPIO will be set to I2C function automatically.	0x0
5	STA	R/W	START Flag When STA='1', the I2C component checks the I2C bus status and if the bus is free a START condition is generated.	0x0
4	STO	R/W	STOP Flag	0x0

			When STO='1' and I2C interface is in master mode, a STOP condition is transmitted to the I2C bus.	
3	SI	R/C	Serial Interrupt Flag The "SI" is set by hardware when one of 25 out of 26 possible I2C states is entered. The only state that does not set the "SI" is state F8h, which indicates that no relevant state information is available. The "SI" flag must be cleared by software. In order to clear the "SI" bit, '0' must be written to this bit. Writing a '1' to "SI" bit does not change value of the "SI". When an interrupt is occurred, clear SI means the trigger of next action, so all the necessary control register or data must be set before SI is cleared.	0x0
2	AA	R/W	Assert Acknowledge Flag When AA='1', an "acknowledge" will be returned when: - the "own slave address" has been received - the general call address has been received while GC bit in i2caddr register was set - a data byte has been received while I2C was in master receiver mode - a data byte has been received while I2C was in slave receiver mode When AA='0', an "not acknowledge" will be returned when: - a data byte has been received while I2C was in master receiver mode - a data byte has been received while I2C was in slave receiver mode	0x0
1	CR1	R/W	Clock rate bit 1	0x0
0	CR0	R/W	Clock rate bit 0	0x0

Table 23-5 shows the SCL clock frequency at master mode under different CR2~CR0 setting.

Table 23-5 SCL clock speed setting

CR2	CR1	CR0	SCL Frequency (KHz)				Clock
			PCLK = 6.5536 MHz	PCLK = 13.1072 MHz	PCLK = 19.6608 MHz	PCLK = 26.2144 MHz	Divided by

0	0	0	25.6	51.2	76.8	102.4	256
0	0	1	29.2	58.4	87.6	116.8	224
0	1	0	34.1	68.2	102.3	136.4	192
0	1	1	40.9	81.9	122.9	163.8	160
1	0	0	6.8	13.7	20.5	27.3	960
1	0	1	54.6	109.2	163.8	218.4	120
1	1	0	109.2	218.4	327.7	436.9	60
1	1	1	TIMER3's overflow frequency divide by 8				

23.5.4. I2C_STS Register

Table 23-6 Description of I2C_STS Register

Bit	Name	Type	Description	Default
31:8	-	-	Reserved.	0
7:3	STS	R	I2C Status Code.	0x1F
2:0	-	-	Reserved.	0

Table 23-7~Table 23-11 shows the status code under different kind of I2C modes.

Table 23-7 I2C Status in Master Transmitter Mode

STS	Status of I2C	Application Software Response					Next Action taken by I2C hardware
		Read/Write	To I2C_CTRL				
		I2C_DATA	STA	STO	SI	AA	
0x08	A START condition has been transmitted.	Write SLA+W*	X	0	0	X	SLA+W will be transmitted ACK will be received
0x10	A repeated START condition has been transmitted.	Write SLA+W	X	0	0	X	SLA+W will be transmitted ACK will be received
		Write SLA+R*	X	0	0	X	SLA+R will be transmitted I2C will be switched to master receive mode
0x18	SLA+W has been transmitted. ACK has been received.	Write data byte	0	0	0	X	Data byte will be transmitted. ACK will be received
		no action	1	0	0	X	Repeated START will be transmitted.
		no action	0	1	0	X	STOP condition will be

							transmitted. STO flag will be reset
		no action	1	1	0	X	STOP condition followed by a START condition will be transmitted. STO flag will be reset
0x20	SLA+W has been transmitted. NACK has been received.	Write data byte	0	0	0	X	Data byte will be transmitted. ACK will be received
		no action	1	0	0	X	Repeated START will be transmitted.
		no action	0	1	0	X	STOP condition will be transmitted. STO flag will be reset
		no action	1	1	0	X	STOP condition followed by a START condition will be transmitted. STO flag will be reset
0x28	Data byte in i2cdat has been transmitted. ACK has been received.	Write data byte	0	0	0	X	Data byte will be transmitted. ACK bit will be received
		no action	1	0	0	X	Repeated START will be transmitted.
		no action	0	1	0	X	STOP condition will be transmitted. STO flag will be reset.
		no action	1	1	0	X	STOP condition followed by a START condition will be transmitted. STO flag will be reset.
0x30	Data byte in i2cdat has been transmitted. NACK has been received.	Write data byte *	0	0	0	X	Data byte will be transmitted. ACK will be received.
		no action	1	0	0	X	Repeated START will be transmitted.
		no action	0	1	0	X	STOP condition will be transmitted. STO flag will be reset.
		no action	1	1	0	X	STOP condition followed by a START condition will be transmitted. STO flag will be

							reset.

*: SLA+W: Slave address [7:1] and write bit as bit 0, write bit is 0.

*: SLA+R: Slave address [7:1] and read bit as bit 0, read bit is 1.

Table 23-8 I2C Status in Master Receiver Mode

STS	Status of I2C	Application Software Response					Next Action taken by I2C hardware
		Read/Write	To I2C_CTRL				
		I2C_DATA	STA	STO	SI	AA	
0x08	A START condition has been transmitted	Write SLA+R	X	0	0	X	SLA+R will be transmitted. ACK will be received
0x10	A repeated START condition has been transmitted.	Write SLA+R	X	0	0	X	SLA+R will be transmitted. ACK will be received
		Write SLA+W	X	0	0	X	SLA+W will be transmitted. I2C will be switched to master transmit mode
0x40	SLA+R has been transmitted. ACK has been received.	no action	0	0	0	0	Data byte will be received. not ACK will be returned
		no action	0	0	0	1	Data byte will be received. ACK will be returned
0x48	SLA+R has been transmitted. Not ACK has been received.	no action	1	0	0	X	Repeated START condition will be transmitted
		no action	0	1	0	X	STOP condition will be transmitted. STO flag will be reset
		no action	1	1	0	X	STOP condition followed by a START condition will be transmitted. STO flag will be reset
0x50	Data byte has been received. ACK has been returned.	Read data byte	0	0	0	0	Data byte will be received. not ACK will be returned
		Read data byte	0	0	0	1	Data byte will be received. ACK will be returned
0x58	Data byte has been received. Not ACK has been returned.	Read data byte	1	0	0	X	Repeated START condition will be transmitted
		Read data byte	0	1	0	X	STOP condition will be transmitted. STO flag will be reset
		Read data	1	1	0	X	STOP condition followed by a

		byte					START condition will be transmitted. STO flag will be reset

Table 23-9 I2C Status in Slave Receiver Mode

STS	Status of I2C	Application Software Response					Next Action taken by I2C hardware
		Read/Write	To I2C_CTRL				
		I2C_DATA	STA	STO	SI	AA	
0x60	Own SLA+W has been received. ACK has been returned.	no action	X	0	0	0	Data byte will be received and not ACK will be returned.
		no action	X	0	0	1	Data byte will be received and ACK will be returned.
0x68	Arbitration lost in SLA+R/W as master. Own SLA+W has been received, ACK returned.	no action	X	0	0	0	Data byte will be received and not ACK will be returned.
		no action	X	0	0	1	Data byte will be received and ACK will be returned.
0x70	General call address (00H) has been received. ACK has been returned.	no action	X	0	0	0	Data byte will be received and not ACK will be returned.
		no action	X	0	0	1	Data byte will be received and ACK will be returned.
0x78	Arbitration lost in SLA+R/W as master. General call address has been received, ACK returned.	no action	X	0	0	0	Data byte will be received and not ACK will be returned.
		no action	X	0	0	1	Data byte will be received and ACK will be returned.
0x80	Previously addressed with own SLV address. DATA has been received. ACK returned.	Read data byte	X	0	0	0	Data byte will be received and not ACK will be returned.
		Read data byte	X	0	0	1	Data byte will be received and ACK will be returned.
0x88	Previously addressed with own SLA. DATA byte has been received. Not ACK returned.	Read data byte	0	0	0	0	Switched to not addressed SLV mode. No recognition of own SLA or general call address.
		Read data byte	0	0	0	1	Switched to not addressed SLV mode. Own SLA or general call address will be

							recognized.
		Read data byte	1	0	0	0	Switched to not addressed SLV mode. No recognition of own SLA or general call address. START condition will be transmitted when the bus becomes free.
		Read data byte	1	0	0	1	Switched to not addressed SLV mode. Own SLA or general call address will be recognized. START condition will be transmitted when the bus becomes free.
0x90	Previously addressed with general call address. DATA has been received. ACK returned.	Read data byte	X	0	0	0	Data byte will be received and not ACK will be returned.
		Read data byte	X	0	0	1	Data byte will be received and ACK will be returned.
0x98	Previously addressed with general call address. DATA has been received. Not ACK returned.	Read data byte	0	0	0	0	Switched to not addressed SLV mode. No recognition of own SLA or general call address
		Read data byte	0	0	0	1	Switched to not addressed SLV mode. Own SLA or general call address will be recognized.
		Read data byte	1	0	0	0	Switched to not addressed SLV mode; no recognition of own SLA or general call address. START condition will be transmitted when the bus becomes free.
		Read data byte	1	0	0	1	Switched to not addressed SLV mode. Own SLA or general call address will be recognized. START condition will be transmitted when the bus becomes free
0xA0	A STOP condition or repeated START condition has been received while still	no action	0	0	0	0	Switched to not addressed SLV mode. No recognition of own SLA or general call address.

	addressed as slave receive or slave transmit mode.	no action	0	0	0	1	Switched to not addressed slave mode. Own SLA or general call address will be recognized.
		no action	1	0	0	0	Switched to not addressed SLV mode. No recognition of own SLA or general call address. START condition will be transmitted when the bus becomes free
		no action	1	0	0	1	Switched to not addressed SLV mode. Own SLA or general call address will be recognized. START condition will be transmitted when the bus becomes free.

Table 23-10 I2C Status in Slave Transmitter Mode

STS	Status of I2C	Application Software Response					Next Action taken by I2C hardware
		Read/Write	To I2C_CTRL				
		I2C_DATA	STA	STO	SI	AA	
0xA8	Own SLA+R has been received. ACK has been returned.	Write data byte	X	0	0	0	Last data byte will be transmitted and ACK will be received.
		Write data byte	X	0	0	1	Data byte will be transmitted. ACK will be received.
0xB0	Arbitration lost in SLA+R/W as master. Own SLA+R has been received. ACK has been returned.	Write data byte	X	0	0	0	Last data byte will be transmitted and ACK will be received.
		Write data byte	X	0	0	1	Data byte will be transmitted. ACK will be received.
0xB8	Data byte has been transmitted. ACK has been received.	Write data byte	X	0	0	0	Last data byte will be transmitted and ACK will be received.
		Write data byte	X	0	0	1	Data byte will be transmitted; ACK will be received.
0xC0	Data byte has been transmitted. NACK	no action	0	0	0	0	Switched to not addressed SLV mode. No recognition of

	has been received.						own SLA or general call address.
		no action	0	0	0	1	Switched to not addressed SLV mode. Own SLA or general call address will be recognized.
		no action	1	0	0	0	Switched to not addressed SLV mode. No recognition of own SLA or general call address. START condition will be transmitted when the bus becomes free.
		no action	1	0	0	1	Switched to not addressed SLV mode. Own SLA or general call address will be recognized. START condition will be transmitted when the bus becomes free.
0xC8	Last data byte has been transmitted. ACK has been received.	no action	0	0	0	0	Switched to not addressed SLV mode. No recognition of own SLA or general call address.
		no action	0	0	0	1	Switched to not addressed SLV mode. Own SLA or general call address will be recognized.
		no action	1	0	0	0	Switched to not addressed SLV mode. No recognition of own SLA or general call address. START condition will be transmitted when the bus becomes free.
		no action	1	0	0	1	Switched to not addressed SLV mode. Own SLA or general call address will be recognized. START condition will be transmitted when the bus becomes free.

Table 23-11 I2C Misc. Status

STS	Status of I2C	Application Software Response					Next Action taken by I2C hardware
		Read/Write	To I2C_CTRL				
		I2C_DATA	STA	STO	SI	AA	

0x38	Arbitration lost	No action	0	0	0	X	I2C bus will be released; A start condition will be transmitted.
		No action	1	0	0	X	when the bus becomes free (enter to a master mode)
0xF8	No relevant state information available; si=0	No action	X	X	X	X	Wait or proceed current transfer
0x00	Bus error during MST or selected slave modes	No action	0	1	0	X	Only the internal hardware is affected in the MST or addressed SLV modes. In all cases, the bus is released and I2C is switched to the not addressed SLV mode. Sto flag is reset.

23.5.5. I2C_CTRL2 Register

Table 23-12 Description of I2C_CTRL2 Register

Bit	Name	Type	Description	Default
31:1	-	-	Reserved.	0
0	INTEN	R/W	Interrupt enable control of I2C controller. 0: Disable. 1: Enable.	0x0

23.6. Application Notes

23.6.1. I2C Bus Protocol: Start/Stop Generation

A Start condition can transfer a one-byte serial data over the SDA line, and a stop condition can terminate the data transfer. A stop condition is a Low-to-High transition of the SDA line while SCL is high. Start and Stop conditions are always generated by the master. The I2C-bus is busy when a Start condition is generated. A few clocks after a Stop condition, the IIC-bus will be free, again.

When a master initiates a Start condition, it should send a slave address to notify the slave device. The one byte of address field consists of a 7-bit address and a 1-bit transfer direction indicator (that is, write or read). If bit 8 is 0, it indicates a write operation (transmit operation); if bit 8 is 1, it indicates a request for data read (receive operation).

The master will finish the transfer operation by transmitting a Stop condition. If the master wants to continue the data transmission to the bus, it should generate another Start condition as well as a slave address. In this way, the read/write operation can be performed in various formats.

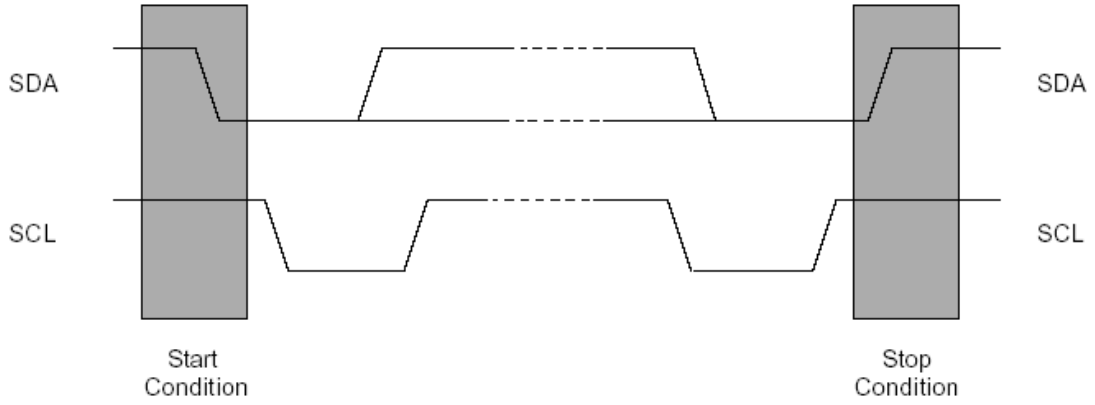

Figure 23-2 Start and Stop Conditions

23.6.2. Data Transfer Format

Every byte placed on the SDA line should be eight bits in length. The number of bytes which can be transmitted per transfer is unlimited. The first byte following a Start condition should have the address field. The address field can be transmitted by the master when the IIC-bus is operating in master mode. Each byte should be followed by an acknowledgement (ACK) bit. The MSB bit of the serial data and addresses are always sent first.

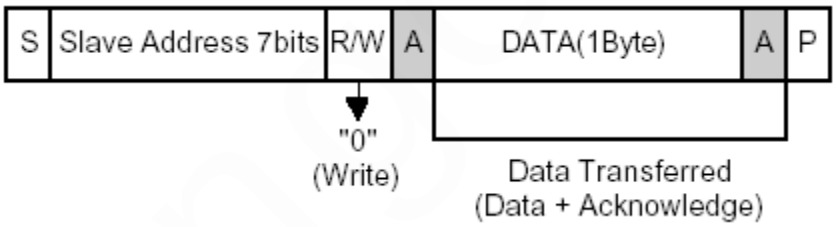

Figure 23-3 Write Mode with 7-bits Address

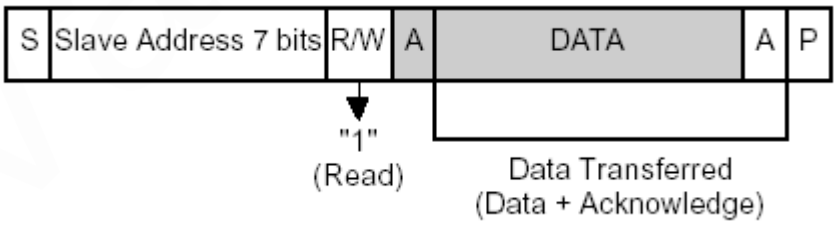

Figure 23-4 Read Mode with 7-bits Address

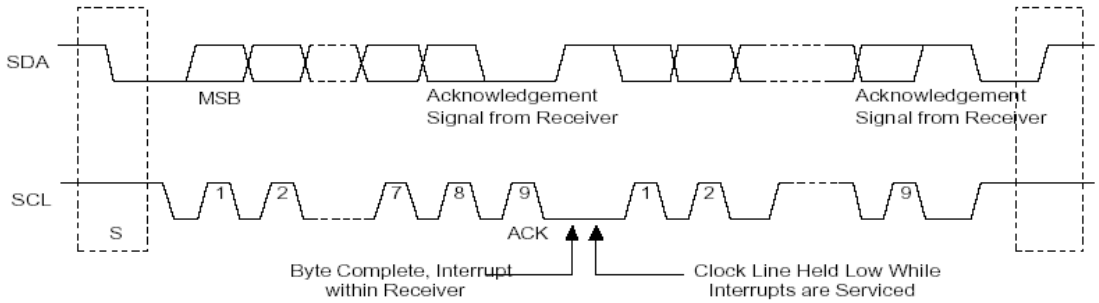

Figure 23-5 Data Transfer on The I2C bus

23.6.3. ACK Signal Transmission

To finish a one-byte transfer operation completely, the receiver should send an ACK bit to the transmitter. The ACK pulse should occur at the ninth clock of the SCL line. Eight clocks are required for the one-byte data transfer. The master should generate the clock pulse required to transmit the ACK bit.

The transmitter should release the SDA line by making the SDA line High when the ACK clock pulse is received. The receiver should also drive the SDA line Low during the ACK clock pulse so that the SDA is Low during the High period of the ninth SCL pulse.

The ACK bit transmit function can be enabled or disabled by software (AA). However, the ACK pulse on the ninth clock of SCL is required to complete a one-byte data transfer operation.

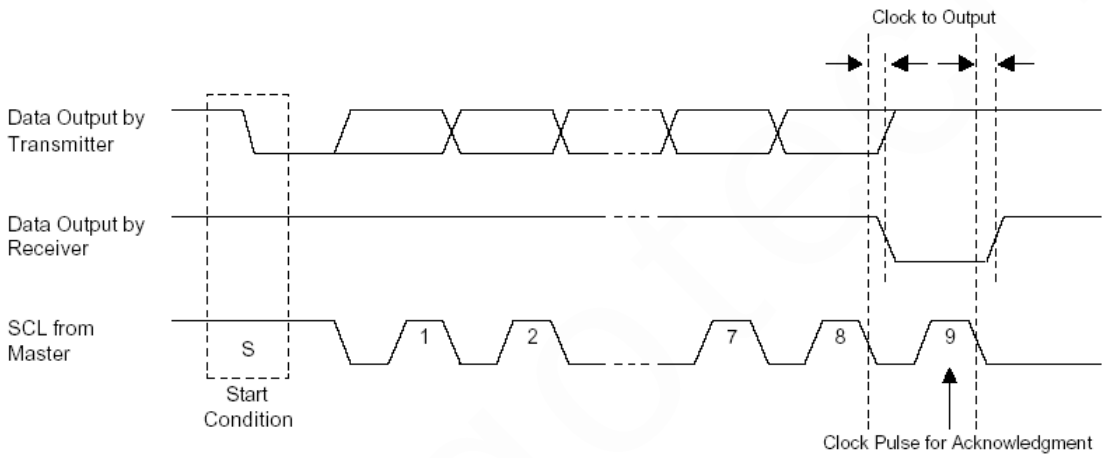

Figure 23-6 Acknowledge on The I2C bus

23.6.4. Read-Write Operation

In the transmitter mode, after the data is transferred, the I2C-bus interface will wait until pending interrupt is cleared. Until the interrupt is cleared, the SCL line will be held low. After the interrupt is cleared, the SCL line will be released. After the CPU receives the interrupt request, it should write a new data into I2C_DATA before clear the pending interrupt.

In the receive mode, after a data is received, the I2C-bus interface will wait until pending interrupt is cleared. Until the pending interrupt is cleared, the SCL line will be held low. After the pending interrupt is cleared, the SCL line will be released. After the CPU receives the interrupt request, it should read the data from I2C_DATA before clear the pending interrupt.

Bus Arbitration Procedures

Arbitration takes place on the SDA line to prevent the contention on the bus between two masters. If a master with a SDA High level detects another master with a SDA active Low level, it will not initiate a data transfer because the current level on the bus does not correspond to its own. The arbitration procedure will be extended until the SDA line turns high.

However when the masters simultaneously lower the SDA line, each master should evaluate whether or not the mastership is allocated to itself. For the purpose of evaluation, each master should detect the

address bits. While each master generates the slaver address, it should also detect the address bit on the SDA line because the

Lowering of SDA line is stronger than maintaining High on the line. For example, one master generates a Low as first address bit, while the other master is maintaining High. In this case, both masters will detect Low on the bus because Low is stronger than high even if first master is trying to maintain high on the line. When this happens, low (as the first bit of address) -generating master will get the mastership and high (as the first bit of address) - generating master should withdraw the mastership. If both masters generate Low as the first bit of address, there should be an arbitration for second address bit, again. This arbitration will continue to the end of last address bit.

Abort Condition

If a slave receiver can't acknowledge the confirmation of the slave address, it should hold the level of the SDA line High. In this case, the master should generate a Stop condition and abort the transfer.

If a master receiver is involved in the aborted transfer, it should signal the end of the slave transmit operation by canceling the generation of an ACK after the last data byte received from the slave. The slave transmitter should then release the SDA to allow a master to generate a Stop condition.

23.6.5. Interface Timing

The following diagram shows the interface connection of I2C bus.

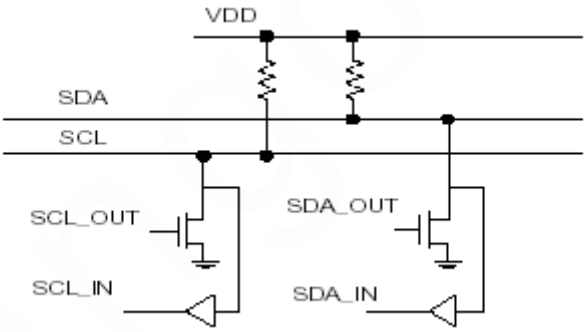

Figure 23-7 I2C Bus Connection Example

To control the frequency of the serial clock (SCL), programmer can use CR2~CR0 in the I2C_CTRL register.

The I2C Bus supports fSCL = 1MHz (period: 1us).

— Rise Time of the SCL and SDA: fSCL= 100kHz：1000ns；fSCL= 400kHz：300ns

— Fall Time of the SCL and SDA: fSCL= 100kHz：300ns；fSCL= 400kHz：300ns

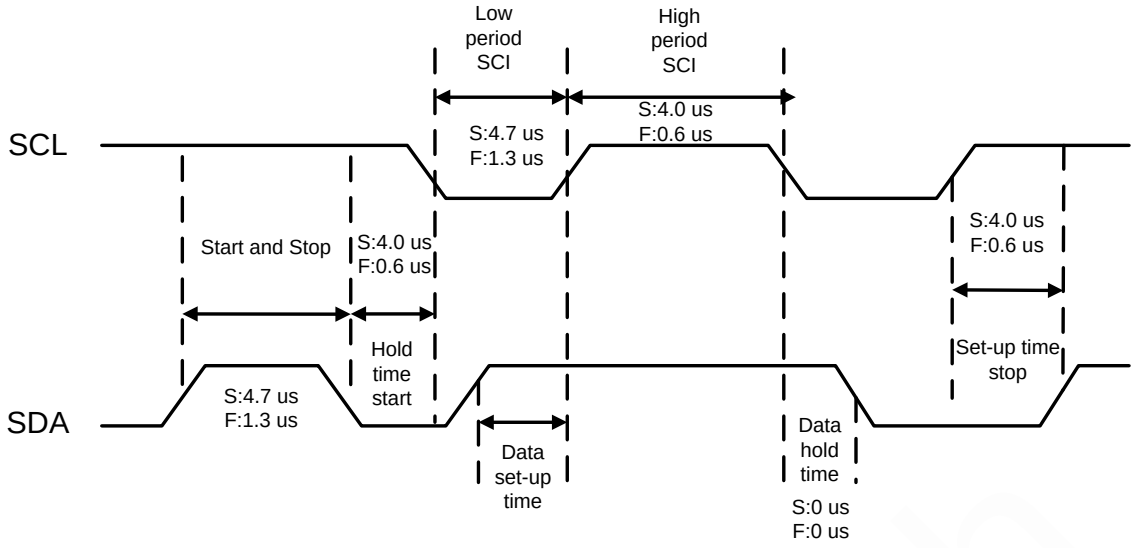

Figure 23-8 Timing on the SCL and SDA

Table 23-13 I2C AC Characteristics

Time	I2C – master mode (CR<7)		I2C – master mode (CR=7)	
tHD:STA	scl/4	min(15 clk)	scl/4	(2 bclk)
tLOW	scl/2	min(30 clk)	scl/2	(4 bclk)
tHIGH	scl/2	min(30 clk)	scl/2	(4 bclk)
tSU:STA	scl/4	min(15 clk)	scl/2 – if (scl/4<7 clk)	
			scl/4 – others	
tHD:DAT	6*clk	(6 clk)	6*clk	(6 clk)
tSU:DAT	1*clk (-for first bit)*	(1 clk)	1*clk (-for first bit)*	(1 clk)
	scl/2 - 6*clk	min(24 clk)	scl/2 - 6*clk	min(1clk)
tSU:STO	scl/4 + 7*clk	min(22 clk)	min(bclk +9)	
tBUF	(¾ scl)+9*clk	min(54 clk)	min (¾ scl)	

*- is a case when write to data register is close to the scl rising edge of the first bit data byte.

clk: APB clock period

bclk: Timer 3's overflow period

scl: I2C clock period

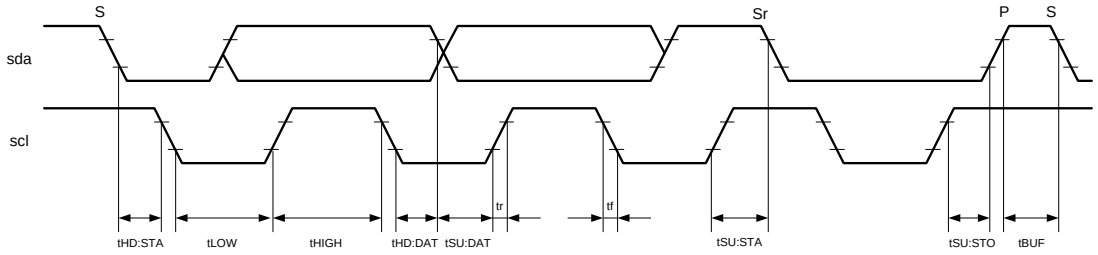

Figure 23-9 AC Timing of I2C Controller

23.6.6. The Resolution for SDA Pin Lock-Status

In the process of I2C communication, when the chip is reset (software reset, WDT reset, external reset), it may cause the I2C data line (SDA is locked in low level) is stuck LOW, the master should send nine clock pulses. The device that held the bus LOW should release it within those nine clocks. If I2C is not stuck LOW in the current time, the nine clock pulses add by user will not affect I2C usage.

23.7. Firmware Flow

23.7.1. Master Transmit Mode

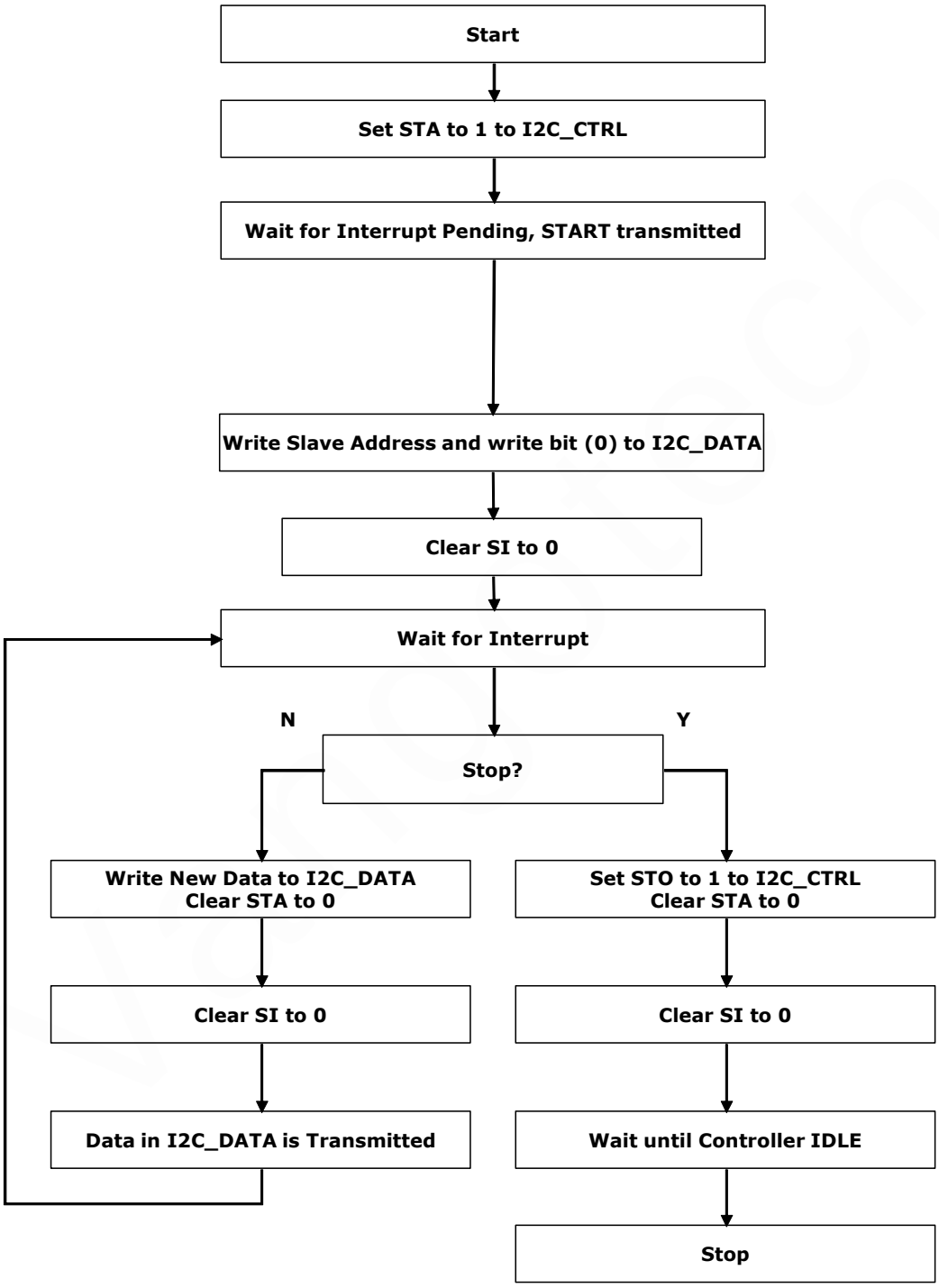

Figure 23-10 Operations for Master Transmitter Mode

23.7.2. Master Receive Mode

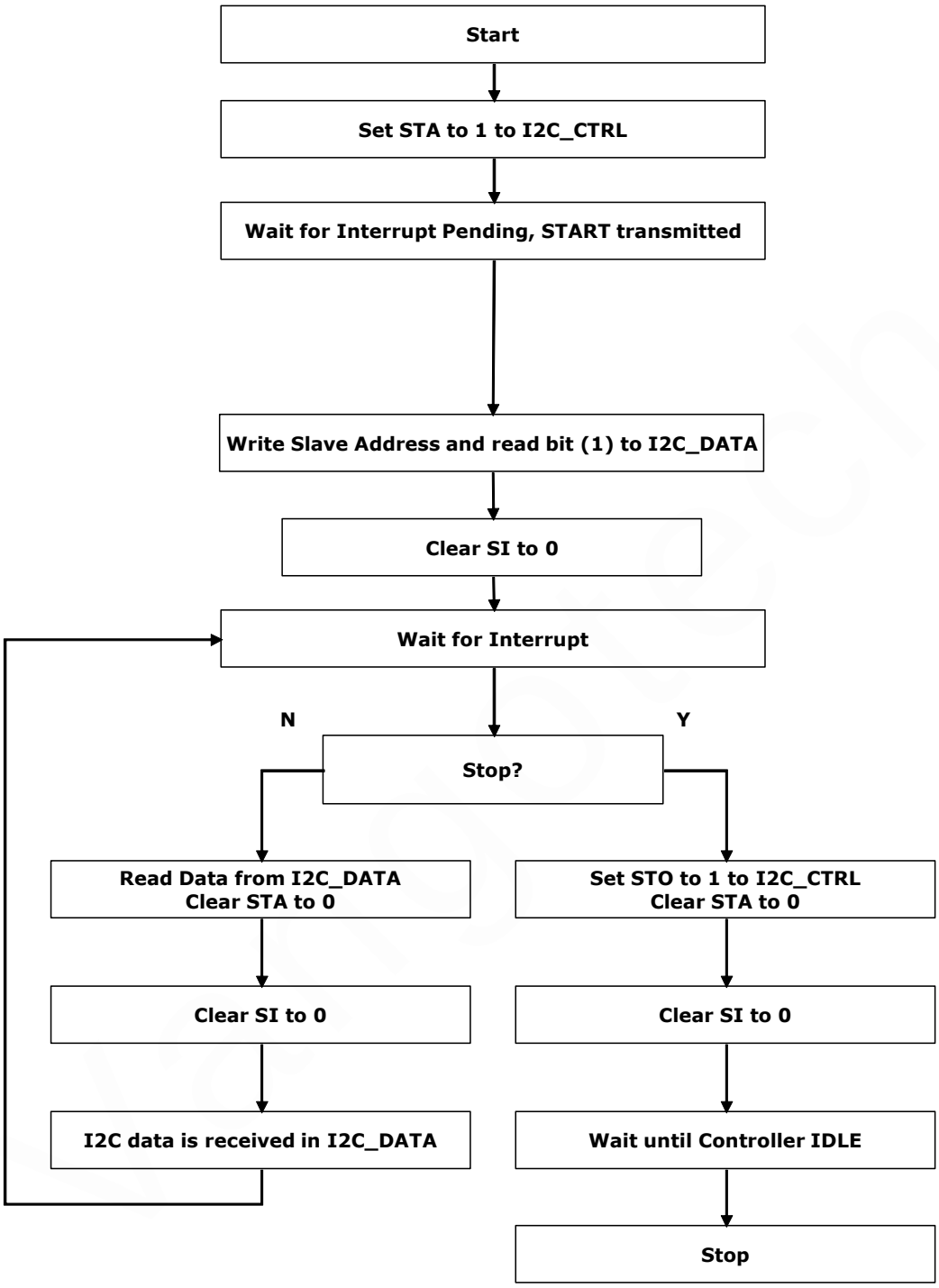

Figure 23-11 Operations for Master Receiver Mode

23.7.3. Slave Transmit Mode

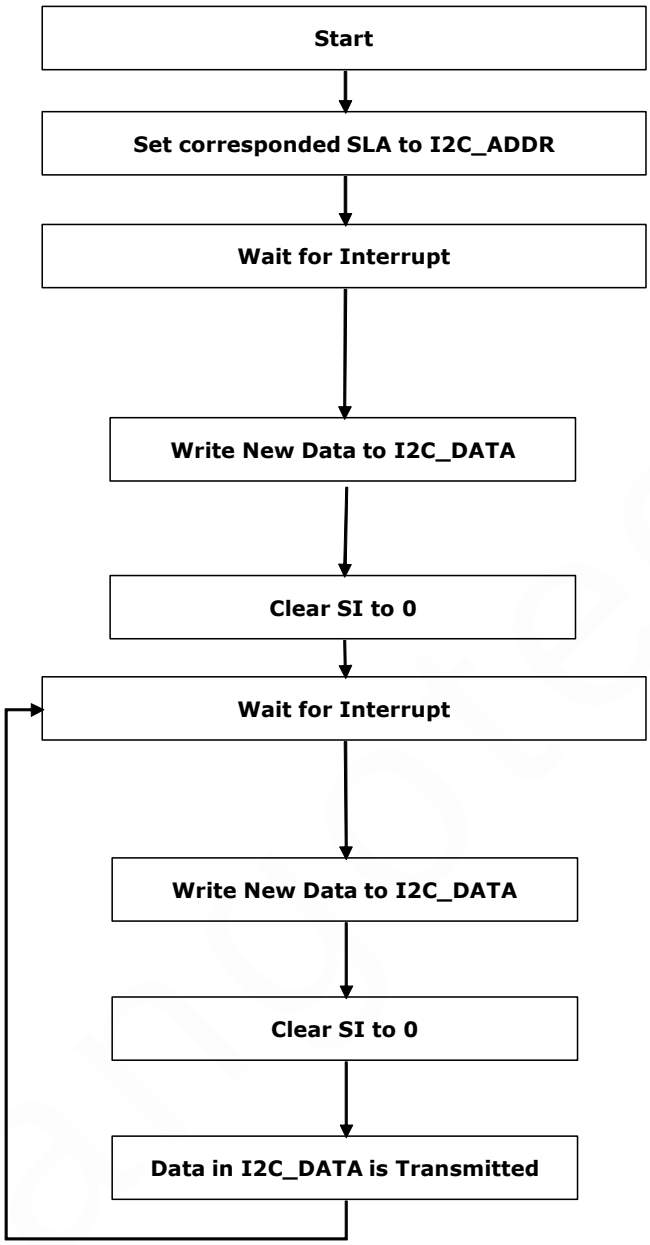

Figure 23-12 Operations for Slave Transmitter Mode

23.7.4. Slave Receive Mode

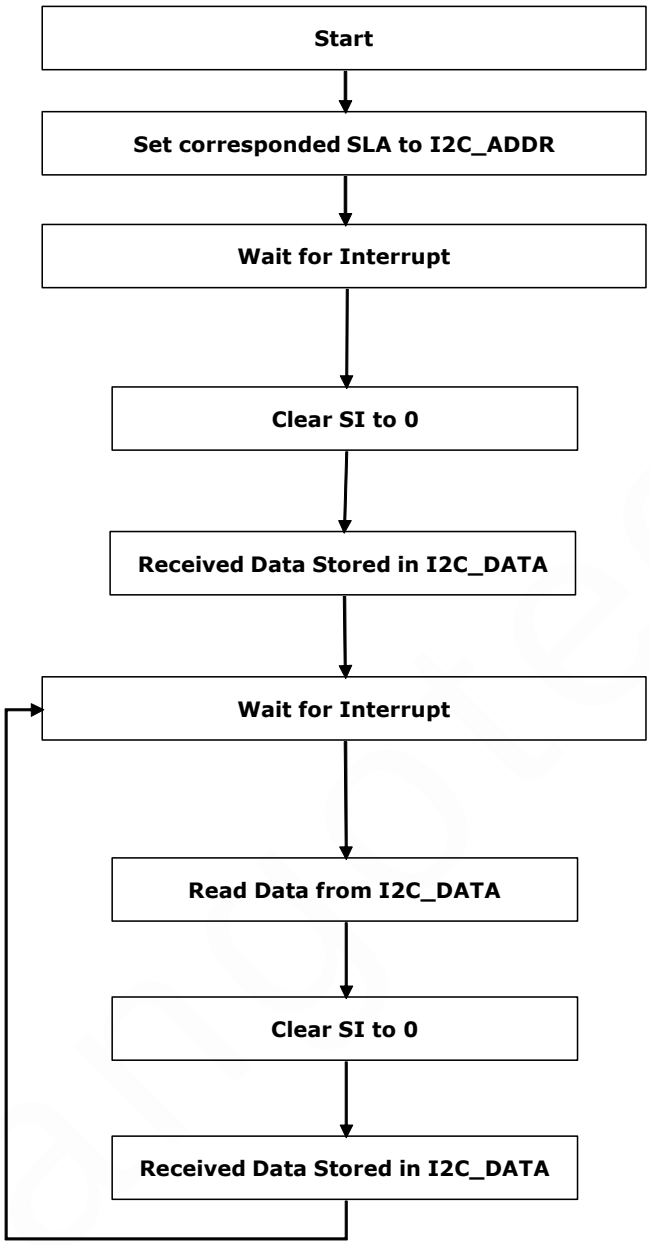

Figure 23-13 Operations for Slave Receiver Mode

24. Interrupt Controller

24.1. Introduction

Any interrupt can wake up the system from IDLE, some of them can wake up the system from sleep, some of them can wake up the system from deep sleep.

24.2. Feature

24.3. Interrupt Sources

Table 24-1 Interrupt sources

Item	Vector address	Interrupt Nom.	Description	Enable bit of peripheral event	Flag of peripheral event	Wake-up source	
						Deep Sleep	Sleep
NMI	00000008h	-14	NMI				
HardFault	0000000Ch	-13	HardFault				
SVCall	0000002Ch	-5	SVCall				
PendSV	00000038h	-2	PendSV				
SysTick	0000003Ch	-1	SysTick				
PMU	00000040h	0	IOA0~15	PMU_CONTROL.0 and PMU_IOAWKUEN.0~15	PMU_IOAINTSTS.0~15	V	V
			32K crystal is removed or broken	PMU_CONTROL.2	PMU_STS.0	V	V
			6M crystal is removed or broken	PMU_CONTROL.3	PMU_STS.1		
RTC	00000044h	1	illegal time format	RTC_INTEN.1	RTC_INTSTS.1	V	V
			multi-second period is reach	RTC_INTEN.2	RTC_INTSTS.2	V	V
			multi-minute	RTC_INTEN.3	RTC_INTS	V	V

			period is reach		TS.3		
			multi-hour period is reach	RTC_INTEN.4	RTC_INTSTS.4	V	V
			mid-night (00:00) is reach	RTC_INTEN.5	RTC_INTSTS.5	V	V
			32K counter period is reach	RTC_INTEN.6	RTC_INTSTS.6	V	V
			illegal write to CE register	RTC_INTEN.8	RTC_INTSTS.8		
U32K0~1	00000048h 0000004Ch	2\3	Receiver data input	U32Kx_CTRL1.0	U32Kx_STS.0	V	V
			Receive parity error	U32Kx_CTRL1.1	U32Kx_STS.1	V	V
			Receive buffer overrun	U32Kx_CTRL1.2	U32Kx_STS.2	V	V
I2C	00000050h	4	Serial Interrupt	I2C_CTRL2.0	I2C_CTRL.3		
SPI1~2	00000054h \000000ACh	5\27	SPI Transmit	SPIx_TXSTS.14	SPIx_TXSTS.15		
			SPI Receive	SPIx_RXSTS.14	SPIx_RXSTS.15		
UART0~5	00000058h ~0000006Ch	6\7\8\9\10\11	Receive	UARTx_CTRL.3	UARTx_INTSTS.1		
			Transmit overrun	UARTx_CTRL.4	UARTx_INTSTS.2		
			Receive overrun	UARTx_CTRL.5	UARTx_INTSTS.3		
			Receive parity error	UARTx_CTRL.7	UARTx_INTSTS.4		
			Transmit done	UARTx_CTRL.8	UARTx_INTSTS.5		
ISO78160~1	00000070h ~00000074h	12\13	Receive	ISO7816x_CFG.5	ISO7816x_INFO.5		
			Transmit	ISO7816x_CFG.6	ISO7816x_INFO.6		
			Receive overrun	ISO7816x_CFG.7	ISO7816x_INFO.7		

Timer0~3	00000078h ~00000084h	14\15\16\17	Timer x overflow	TMRx_CTRL.3	TMRx_INT.0		
PWM0~3	00000088h ~000094h	18\19\20\21	PWM timer overflow	PWMx_CTL.1	PWMx_CTL.0		
			Compare 0	PWMx_CCTL0.4	PWMx_CCTL0.0		
			Compare 1	PWMx_CCTL1.4	PWMx_CCTL1.0		
			Compare 2	PWMx_CCTL2.4	PWMx_CCTL2.0		
DMA	00000098h	22	Channel 0 package end	DMA_IE.0	DMA_STS.4		
			Channel 1 package end	DMA_IE.1	DMA_STS.5		
			Channel 2 package end	DMA_IE.2	DMA_STS.6		
			Channel 3 package end	DMA_IE.3	DMA_STS.7		
			Channel 0 frame end	DMA_IE.4	DMA_STS.8		
			Channel 1 frame end	DMA_IE.5	DMA_STS.9		
			Channel 2 frame end	DMA_IE.6	DMA_STS.10		
			Channel 3 frame end	DMA_IE.7	DMA_STS.11		
			Channel 0 data abort	DMA_IE.8	DMA_STS.12		
			Channel 1 data abort	DMA_IE.9	DMA_STS.13		
			Channel 2 data abort	DMA_IE.10	DMA_STS.14		
			Channel 3 data abort	DMA_IE.11	DMA_STS.15		
FLASH	0000009Ch	23	checksum error	FLASH_CTRL.2	FLASH_INT.0		
ANA	000000A0h	24	manual ADC	ANA_INTEN.0	ANA_INTS		

			conversion done		TS.0		
			auto ADC conversion done	ANA_INTEN.1	ANA_INTSTS.1		
			COMP1 rising or falling	ANA_INTEN.2	ANA_INTSTS.2	V	V
			COMP2 rising or falling	ANA_INTEN.3	ANA_INTSTS.3	V	V
			VDDALARM rising or falling	ANA_INTEN.7	ANA_INTSTS.7	V	V
			VDCIN rising or falling	ANA_INTEN.8	ANA_INTSTS.8	V	V
			AVCCLV rising or falling	ANA_INTEN.10	ANA_INTSTS.10	V	V
			VDCINDROP is 0 and the entry of sleep or deep-sleep modes are detected	ANA_INTEN.11	ANA_INTSTS.11	V	V
			ANA_REGx error	ANA_INTEN.12	ANA_INTSTS.12	V	V
			TADC change over threshold	ANA_INTEN.13	ANA_INTSTS.13	V	V

25. MISC Controller

25.1. Introduction

The MISC controller is used to control some special function of V94XX. There are two MISC controllers inside V94XX, one is in core domain (MISC controller) which will be power-off during sleep and deep-sleep mode. The setting in MISC controller will be reset after wake-up from sleep or deep-sleep mode, programmer should restore the setting manually after wake-up from these two states. Another one (MISC2 controller) is in retention domain which will be power-off at deep-sleep mode. The setting in MISC2 controller will be reset after wake-up from deep-sleep mode, programmer should restore the setting manually after wake-up from deep-sleep mode.

25.2. Feature

--Clock control of each sub-module

--Clock divider of AHBCLK and APBCLK.

--FLASH program tick control

--IR duty control.

--SRAM parity check interrupt control.

25.3. Block Diagram

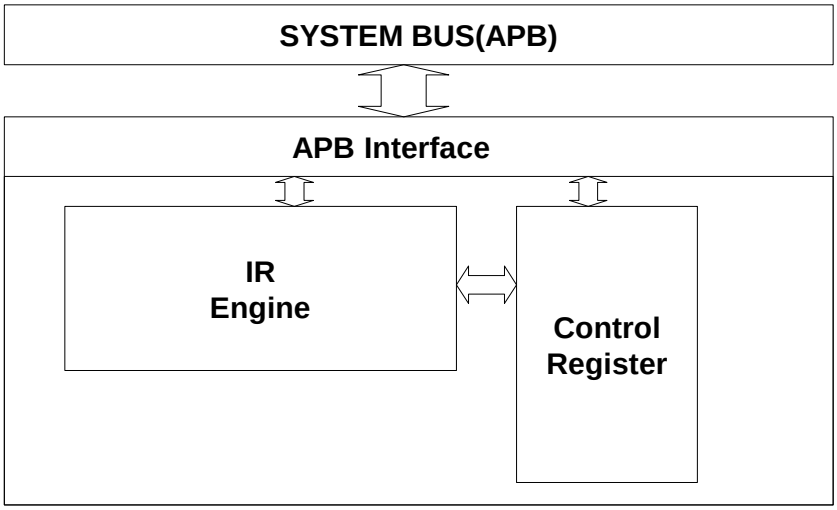

Figure 25-1 Functional Block Diagram of MISC Controller

25.4. Register Location

Table 25-1 Register Location of MISC Controller (MISC Base: 0x40013000)

Name	Type	Address	Description	Default
MISC_SRAMINT	R/C	0x0000	SRAM Parity Error Interrupt.	0x00
MISC_SRAMINIT	R/W	0x0004	SRAM initialize register	0x01
MISC_PARERR	R	0x0008	SRAM Parity Error address register	0x0000
MISC_IREN	R/W	0x000C	IR enable control register	0x00
MISC_DUTYL	R/W	0x0010	IR Duty low pulse control register	0x0000
MISC_DUTYH	R/W	0x0014	IR Duty high pulse control register	0x0000
MISC_IRQLAT	R/W	0x0018	Cortex-M0 IRQ latency control register	0x00
MISC_HIADDR	R	0x0020	AHB invalid access address	--
MISC_PIADDR	R	0x0024	APB invalid access address	--

Table 25-2 Register Location of MISC2 Controller (MISC2 Base: 0x40013E00)

Name	Type	Address	Description	Default
MISC2_FLASHWC	R/W	0x0000	FLASH wait cycle register.	0x2100
MISC2_CLKSEL	R/W	0x0004	Clock selection register.	0x0
MISC2_CLKDIVH	R/W	0x0008	AHB clock divider control register	0x00
MISC2_CLKDIVP	R/W	0x000C	APB clock divider control register	0x01
MISC2_HCLKEN	R/W	0x0010	AHB clock enable control register	0x1FF
MISC2_PCLKEN	R/W	0x0014	APB clock enable control register	0xFFFFFFFF

25.5. Register Definition

25.5.1. MISC_SRAMINT Register

Table 25-3 Description of MISC_SRAMINT Register

Bit	Name	Type	Description	Default
31:5	-	-	Reserved.	0
4	LOCKUP	R/C	This bit indicates the CM0 lockup has happened. Write 1 to clear this flag.	0x0
3	PIAC	R/C	This bit indicates that an invalid address access on	0x0

			APB bus is occurred. At the same time, the failure address is latched into MISC_PIADDR. The invalid APB address means not in the region of 0x40010000 ~ 0x40017FFF. If PIACIE is 1, then a NMI will be issued to CM0. Write 1 to clear this flag.	
2	HIAC	R/C	This bit indicates that an invalid address access on AHB bus is occurred. At the same time, the failure address is latched into MISC_HIADDR. The invalid AHB address means not in the region of FLASH or SRAM or IO. If HIACIE is 1, then a NMI will be issued to CM0. Write 1 to clear this flag.	0x0
1	-	-	Reserved.	0
0	PERR	R/C	This bit indicates that a SRAM parity error is happened during the SRAM read process. If PERRIE is 1, then a NMI will be issued to CM0. Write 1 to clear this flag.	0x0

25.5.2. MISC_SRAMINIT Register

Table 25-4 Description of MISC_SRAMINIT Register

Bit	Name	Type	Description	Default
31:8	-	-	Reserved.	0
7	LOCKIE	R/W	CM0 lockup NMI enable register.	0x0
6	PIACIE	R/W	APB invalid address access NMI enable register.	0x0
5	HIACIE	R/W	AHB invalid address access NMI enable register.	0x0
4:3	-	-	Reserved.	0
2	INIT	R/W	SRAM initialize register, set this register to 1 will initialize the SRAM with all zero value with correct parity. This bit will be clear to 0 automatically, during the initialize time, it is not allowed for access of any master on the bus (CPU or DMA), wrong data maybe get during this period.	0x0
1	PERRIE	R/W	SRAM parity error NMI enable register.	0x0
0	PEN	R/W	Parity check enable register. When this bit is 1, all the write access to internal SRAM will also write the parity information into additional parity buffer. When doing SRAM read, automatically parity check will be done and generate the parity error interrupt when parity check fail. By default, this function is turned on, so no need special effort on the software side. But	0x1

			if CPU or DMA access some un-initialize region, parity may happen because the parity information didn't exist in those non-initialize area. At this moment, programmer can use INIT bit to do SRAM initialize automatically.	

25.5.3. MISC_PARERR Register

Table 25-5 Description of MISC_PARERR Register

Bit	Name	Type	Description	Default
31:12	-	-	Reserved.	0
11:0	PEADDR	R	Parity error address. This register store the information of parity error address, when PE NMI is happened, programmer can check this register to know which SRAM address has defect bit. SRAM parity error address =0x20000000+4* PEADDR.	--

25.5.4. MISC_IREN Register

Table 25-6 Description of MISC_IREN Register

Bit	Name	Type	Description	Default
31:6	-	-	Reserved.	0
5:0	IREN	R/W	IR enable control register. Each bit in this register corresponded to 1 UART TX channel. When IREN[x] is set to 1, it means UART TX[x] will be modulated with IR pulse to output.	0x00

25.5.5. MISC_DUTYL Register

Table 25-7 Description of MISC_DUTYL Register

Bit	Name	Type	Description	Default
31:16	-	-	Reserved.	0
15:0	DUTYL	R/W	IR low pulse width control register. The low pulse width will be (DUTYL + 1)*APBCLK period.	0x0000

25.5.6. MISC_DUTYH Register

Table 25-8 Description of MISC_DUTYH Register

Bit	Name	Type	Description	Default
31:16	-	-	Reserved.	0
15:0	DUTYH	R/W	IR high pulse width control register. The high pulse width will be (DUTYH + 1)*APBCLK period.	0x0000

25.5.7. MISC_IRQLAT Register

Table 25-9 Description of MISC_IRQLAT Register

Bit	Name	Type	Description	Default
31:10	-	-	Reserved.	0
9	NOHARDFAULT	R/W	This register is used to disable the hard fault generation to CPU. 0: Enable hard fault generation when bus error is happened. 1: Disable hard fault generation when bus error is happened, the HIAL hard-fault is not able to be disabled by this bit. When CM0 detect hard fault is happened, it will jump to the hard fault service routine. After it complete the hard fault service, it will jump back to normal code and execute the same instruction again. So if the hard fault happens again, it will stop in this loop and never come out. This register is used for CPU to temporary disable the hard fault generation.	0x0
8	LOCKRESET	R/W	This register is used to control if the lockup will issue a system reset. 0: Disable reset generation of CM0 lockup. 1: Enable reset generation of CM0 lockup.	0x0
7:0	IRQLAT	R/W	This register is used to control the Cortex-M0 IRQ latency. The Cortex-M0 processor supports zero jitter interrupt latency for zero wait-state memory. IRQLAT specifies the minimum number of cycles between an interrupt that becomes pended in the NVIC, and the vector fetch for that interrupt being issued on the AHB-Lite interface. If this bus is set to 0, interrupts are taken as quickly as possible. For zero jitter in a	0x00

			zero wait state memory system, set this bus to at least a decimal value of 13. For non-zero wait state memory, zero jitter can be achieved with a higher value on IRQLAT.	

25.5.8. MISC2_FLASHWC Register

Table 25-10 Description of MISC2_FLASHWC Register

Bit	Name	Type	Description	Default
31:14	-	-	Reserved.	0
13:8	1USCYCLE	R/W	This register is used for FLASH controller to calculate 1ustick from AHB clock 1ustick = (AHB clock period)*(1USCYCLE+1) This setting is related to the wake-up time of FLASH, and the programming time of FLASH. FLASH wake-up time =1ustick *10. It must meet 1ustick >=1 μs. For example, the clock frequency of AHB is 26.2144MHz. In order to ensure the minimum wake-up time, 1USCYCLE should be set to 26. So, the wake-up time of FLASH is 27 / 26214400 * 10, which is about 10 μs. For example, the clock frequency of AHB is 32.768KHz. In order to ensure the minimum wake-up time, 1USCYCLE should be set to 0. So, the wake-up time of FLASH is 1 / 32768 * 10, which is about 305 μs.	0x21
7:0	-	-	Reserved.	0x00

25.5.9. MISC2_CLKSEL Register

Table 25-11 Description of MISC2_CLKSEL Register

Bit	Name	Type	Description	Default
31:3	-	-	Reserved.	0
2:0	CLKSEL	R/W	This register is used to control AHB clock source. 0: RCH (6.5MHz RC) 1: XOH (6.5536MHz XTAH). 2: PLLH. 3: RTCCLK (controlled by RTCCLK_SEL in PMU_CONTROL register).	0x0

			4: PLLL. Before clock select to one of the clock source, programmer should enable the corresponded module first by setting PMU_CONTROL register.	

25.5.10. MISC2_CLKDIVH Register

Table 25-12 Description of MISC2_CLKDIVH Register

Bit	Name	Type	Description	Default
31:8	-	-	Reserved.	0
7:0	CLKDIVH	R/W	This register is used to control AHB clock divider. 0: Clock source divide by 1 1: Clock source divide by 2. 2: Clock source divide by 3. .... 255: Clock source divide by 256.	0x00

25.5.11. MISC2_CLKDIVP Register

Table 25-13 Description of MISC2_CLKDIVP Register

Bit	Name	Type	Description	Default
31:8	-	-	Reserved.	0
7:0	CLKDIVP	R/W	This register is used to control APB clock divider. 0: AHB clock divide by 1. 1: AHB clock divide by 2. 2: AHB clock divide by 3. .... 255: AHB clock divide by 256.	0x01

25.5.12. MISC2_HCLKEN Register

Table 25-14 Description of MISC2_HCLKEN Register

Bit	Name	Type	Description	Default
31:9	-	-	Reserved.	0
8:0	HCLKEN	R/W	This register is used to control clock enable of each AHB module. The corresponded module can be turned-off only when its function is not been used. Refer to Table 25-15 for detail about each module. 0: Disable. 1: Enable.	0x1FF

Table 25-15 HCLK Clock Enable of Each Module

Bit	Module	Note
0	--	
1	Arbiter & Bus Matrix	Shouldn't off when CPU or DMA is active.
2	FLASH Controller	Shouldn't off
3	SRAM Controller	Shouldn't off
4	DMA Controller	
5	GPIO Controller	
6	LCD Controller	
7	--	
8	CRYPT Controller	

25.5.13. MISC2_PCLKEN Register

Table 25-16 Description of MISC2_PCLKEN Register

Bit	Name	Type	Description	Default
31:0	PCLKEN	R/W	This register is used to control clock enable of each APB module. The corresponded module can be turned-off only when its function is not been used. Refer to Table 25-17 for detail about each module. 0: Disable. 1: Enable.	0xFFFFFFFF

Table 25-17 PCLK clock Enable of Each Module

Bit	Module	Note

0	AHB2APB Bridge	Shouldn't off when CPU or DMA is access APB peripheral.
1	DMA Controller	
2	I2C	
3	SPI1	
4	UART0	
5	UART1	
6	UART2	
7	UART3	
8	UART4	
9	UART5	
10	ISO78160	
11	ISO78161	
12	Timer	
13	MISC	
14	MISC2	
15	PMU	
16	RTC	
17	ANA	
18	U32K 0	
19	U32K 1	
20	Reserved	
21	SPI2	
31:22	Reserved	

26. CRYPT Controller

26.1. Introduction

The CRYPT controller is used to accelerate the ECC's sign and verify process speed. The major feature of CRYPT controller is the VLI (variable length integer) multiply, add, sub, and shift. It can achieve overall about 4 times faster than pure software process. Every encryption algorithm use VLI can use this hardware to accelerate the process speed. The CRYPT controller can access internal SRAM directly without affect the M0's access, it can also generate the carry or borrow bit automatically.

26.2. Feature

--Support VLI from 32 bits to 512 bits.

--VLI multiplier.

--VLI add and carry bit generation.

--VLI substrate and borrow bit generation.

--VLI right shift 1 bit.

--Internal SRAM direct access.

26.3. Block Diagram

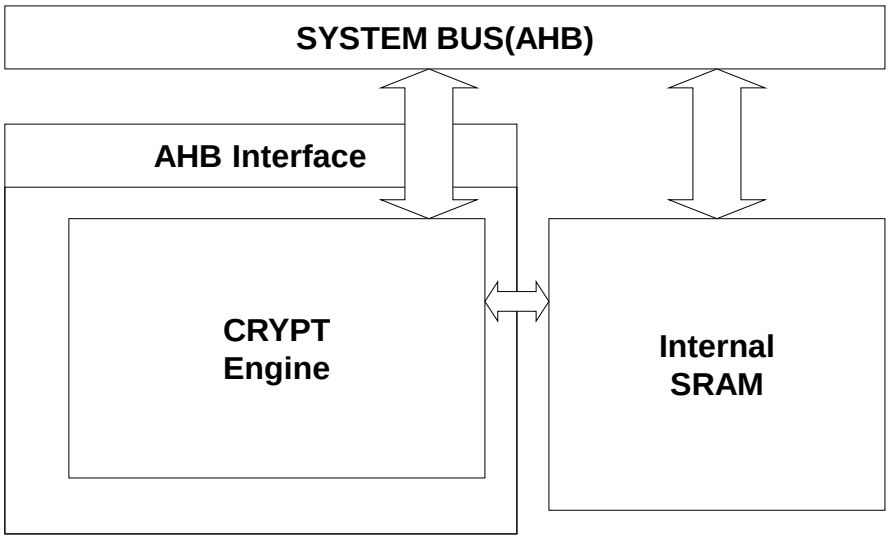

Figure 26-1Functional Block Diagram of CRYPT Controller

26.4. Register Location

Table 26-1 Register Location of CRYPT Controller(MISC Base: 0x40006000)

Name	Type	Address	Description	Default
CRYPT_CTRL	R/W	0x0000	CRYPT control register	0x0000
CRYPT_PTRA	R/W	0x0004	CRYPT pointer A	0x0000
CRYPT_PTRB	R/W	0x0008	CRYPT pointer B	0x0000
CRYPT_PTRO	R/W	0x000C	CRYPT pointer O	0x0000
CRYPT_CARRY	R	0x0010	CRYPT carry/borrow bit register	0x0

26.5. Register Definition

26.5.1. CRYPT_CTRL Register

Table 26-2 Description of CRYPT_CTRL Register

Bit	Name	Type	Description	Default
31:16	-	-	Reserved.	0
15	NOSTOP	R/W	This register is used to control if the CPU will be stop by CRYPT engine when the CRYPT engine is busy and CPU read or write CRYPT engine register. 0: Stop CPU when CRYPT engine is busy. 1: No stop CPU when CRYPT engine is busy. This register only affect the behavior when CPU access the CRYPT register, if CPU didn't access the crypt register, this bit has no effect.	0x0
14:12	-	-	Reserved.	0
11:8	LENGTH	R/W	This bit is used to control the VLI length of current operation. Programmer can set this register together with write 1 to ACT bit, but should not change this register when ACT is 1. 0: 32 bits VLI 1: 64 bits VLI 2: 96 bits VLI ..... 15: 512 bits VLI	0x0

7	-	-	Reserved.	0
6:4	MODE	R/W	This register controls the operation mode of crypt engine. Programmer can set this register together with write 1 to ACT bit, but should not change this register when ACT is 1. 0: Multiply mode, *PTRO = *PTRA x *PTRB 1: Add mode, *PTRO = *PTRA + *PTRB 2: Sub mode, *PTRO = *PTRA - *PTRB 3: RSHIFT1 mode, *PTRO = (*PTRA>>1) 4~7: Reserved.	0x0
3:1	-	-	Reserved.	0
0	ACT	R/W	Write 1 to this bit will start an operation specified in the MODE register. And this bit will be cleared automatically after the operation is done. Write 0 to this bit has no effect.	0x0

26.5.2. CRYPT_PTRA Register

Table 26-3 Description of CRYPT_PTRA Register

Bit	Name	Type	Description	Default
31:15	-	-	Reserved.	0
14:0	PTRA	R/W	This is the PTRA register of CRYPT controller. The value here defines an address in the SRAM (byte unit). The data in this address will be read out to do the CRYPT calculation. Since the CRYPT control only support 32 bits process, the PTRA[1:0] should be 0 for all the time.	0x0000

26.5.3. CRYPT_PTRB Register

Table 26-4 Description of CRYPT_PTRB Register

Bit	Name	Type	Description	Default
31:15	-	-	Reserved.	0
14:0	PTRB	R/W	This is the PTRB register of CRYPT controller. The value here defines an address in the SRAM (byte unit). The data in this address will be read out to do the CRYPT calculation. Since the CRYPT control only	0x0000

			support 32 bits process, the PTRB[1:0] should be 0 for all the time.	

26.5.4. CRYPT_PTRO Register

Table 26-5 Description of CRYPT_PTRO Register

Bit	Name	Type	Description	Default
31:15	-	-	Reserved.	0
14:0	PTRO	R/W	This is the PTRO register of CRYPT controller. The value here defines an address in the SRAM (byte unit). The CRYPT engine will write calculation result into this address. Since the CRYPT control only support 32 bits process, the PTRO[1:0] should be 0 for all the time.	0x0000

26.5.5. CRYPT_CARRY Register

Table 26-6 Description of CRYPT_CARRY Register

Bit	Name	Type	Description	Default
31:1	-	-	Reserved.	0
0	CARRY	R	This bit represent the carry bit after add operation is done. The bit represent borrow bit after sub operation is done. Programmer can read this register immediately after the ACT bit is clear to 0.	0x0

26.6. Application Note

26.6.1. Data Format

The VLI is a positive integer with 32~512 bits. So all the operations here are unsigned processes. The following table shows the data sequence in the SRAM.

Address	Data
PTR + 0	VLI[31:0]
PTR + 4	VLI[63:32]

PTR + 8	VLI[95:64]
PTR + 12	VLI[127:96]
……	……
PTR + 60	VLI[511:480]

When different kind of LENGTH mode is selected, only the selected range of VLI will be used as input data. The following table shows the valid VLI bits under different LENGTH setting.

LENGTH	Data
0	VLI[31:0]
1	VLI[63:0]
2	VLI[95:0]
3	VLI[127:0]
……	……
15	VLI[511:0]

26.6.2. Operation Detail

For each operation, they will have different behavior on many ways, like the process cycles and the output width. The following tables shows detail of each mode.

	MULT	ADD	SUB	RSHIFT1
Operation	*PTRO = *PTRA x *PTRB	*PTRO = *PTRA + *PTRB	*PTRO = *PTRA - *PTRB	*PTRO = (*PTRA>>1)
Output length	2*input length	input length	input length	input length
CARRY bit	X	0: Output not overflow. 1: Output overflow	0: *PTRA > *PTRB 1: *PTRA < *PTRB	X
LENGTH	**Operation Cycles**			
0	8	6	6	6
1	17	8	8	8
2	32	12	12	10
3	53	14	14	12
4	80	18	18	14
5	113	20	20	16

6	152	24	24	18
7	197	26	26	20
8	248	30	30	22
9	305	32	32	24
10	368	36	36	26
11	437	38	38	28
12	512	42	42	30
13	593	44	44	32
14	680	48	48	34
15	773	50	50	36

By default, during the operation cycle, if the CPU accesses any of the register of CRYPT engine, the CPU will be halted until the operation is done. This is to prevent the configuration change during the operation. So if there is any high priority task in the system, it may block until the CPU is released by CRYPT engine. Set NOSTOP bit in the CRYPT_CTRL register to prevent this kind of situation. Under this condition, programmer should take care not to change the CRYPT configuration during the operation busy time.

Since the CRYPT only supports operations in the SRAM, when one of the input is not in the SRAM (ex. In FLASH or ROM), it is necessary to copy it into SRAM before do any operation.

27. Debug Features

V94XX uses the Cortex-M0 core, which contains the hardware debug module.

27.1. Feature

The Cortex-M0 processor supports a number of useful debug features:

--Halting, resuming, and single stepping of program execution

--Access to processor core registers and special registers

--Hardware breakpoints (up to four comparators)

--Software breakpoints (BKPT instruction)

--Data watch points (up to two comparators)

--On-the-fly memory access (system memory can be accessed without stopping the processor)

--PC sampling for basic profiling

--Support of serial wire debug (SWD) protocol

27.2. SWD Port

Table 27-1 Special Function of SW Port

MODE	Function 1	Function 2
Debug (PIN MODE is L)	SWCLK	SWDIO
Normal (PIN MODE is H)	LCDSEG54/IOA0	LCDSEG53/IOA1

28. Cortex-M0 Core Brief Description

The ARM Cortex-M0 processor is designed to meet the needs of modern ultra-low-power microcontroller units (MCUs) and mixed-signal devices. The ARM Cortex-M0 processor is as small as an 8-bit or 16-bit processor, but it is a full 32-bit processor that incorporates advanced technologies with many compelling benefits over 8-bit or 16-bit devices. The ARM Cortex-M0 processor can achieve high Energy Efficiency and Code Density.

28.1. CMSIS Function Specification

Table 28-1 CMSIS Function

function	specification
void NVIC_EnableIRQ(IRQn_Type IRQn);	Enable an interrupt. This function does not apply to system exceptions.
void NVIC_DisableIRQ(IRQn_Type IRQn);	Disable an interrupt. This function does not apply to system exceptions.
void VIC_SetPendingIRQ(IRQn_Type IRQn);	Set the pending status of an interrupt. This function does not apply to system exceptions.
void NVIC_ClearPendingIRQ(IRQn_Type IRQn);	Clear the pending status of an interrupt. This function does not apply to system exceptions.
uint32_t NVIC_GetPendingIRQ(IRQn_Type IRQn);	Obtain the interrupt pending status of an interrupt. This function does not apply to system exceptions.
void NVIC_SetPriority(IRQn_Type IRQn,uint32_t priority);	Set up the priority level of an interrupt or system exception. The priority level value is automatically shifted to the implemented bits in the priority level register.
uint32_t NVIC_GetPriority(IRQn_TypeIRQn);	Obtain the priority level of an interrupt or system exception. The priority level is automatically shifted to remove unimplemented bits in the priority level values.
void __enable_irq(void);	Clear PRIMASK. Enable interrupts and system exceptions.
void __disable_irq(void);	Set PRIMASK. Disable all interrupts including system exceptions (apart from hard fault and NMI).
uint32_t SysTick_Config(uint32_t ticks);	Initialize and start the SysTick counter and its interrupt; this function programs the SysTick to generate SysTick except ionfor every “ticks” number of core clock cycles.
void NVIC_SystemReset(void);	M0-soft reset.
SCB->SCR |= SCB_SCR_SLEEPDEEP_Msk; void __WFI(void);	Wait for interrupt (enter sleep mode).
SCB->SCR &= (uint32_t)~((uint32_t)SCB_SCR_SLEEPDEEP_Msk);	Wait for interrupt (enter idle mode).

void __WFI(void);	

29. Electric energy metering

The V94XX contains a electric energy metering module which supports the total-wave and fundamental-wave of various modes and supports various power grids to monitor events. Furthermore, the waveform data can be transmitted via DMA by SPI protocol, or storage locally through the waveform buffer.

- Metering Features:
  - 3 independent oversampling ∑/Δ ADCs: one of the ADC (channel A) can measure voltage, the other ADC with multifunction measure current or temperature etc.
  - Highly Metering Accurate:
    - Supports the requirements of IEC 62053-21:2020/ IEC 62053-22:2020 and IEC 62053-23:2020.
    - Less than 0.1% error in active energy metering over a dynamic range of 5000:1
    - Less than 0.2% error in reactive energy metering over a dynamic range of 5000:1
    - Less than 0.5% error in current/voltage RMS over a dynamic range of 5000:1.
  - Supports various measurements:
    - DC components of voltage and current signal
    - Total /fundamental instantaneous/average current/voltage RMS
    - Total instantaneous/average active /reactive/apparent power
    - 10 or 12 cycles of total RMS
    - Fundamental instantaneous/average active /reactive/apparent power
    - active/reactive energy, active/reactive/apparent power, Irms, constant value, and fundamental wave are selectable
    - Line frequency and phase
    - Temperature
  - DC signals measurement
  - Software calibration
  - Accelerating calibration when weak current is applied.
- Supports detection for over-current, over-voltage, under-current, under-voltage, voltage dip, and voltage swell
- Supports waveform buffer and waveform transmitted by DMA
- Supports active upload for energy accumulation
- Current input: current shunt resistor, CT, Rogowski Coil, Hall cell, and TMR supportive

29.1. Functional Block Diagram

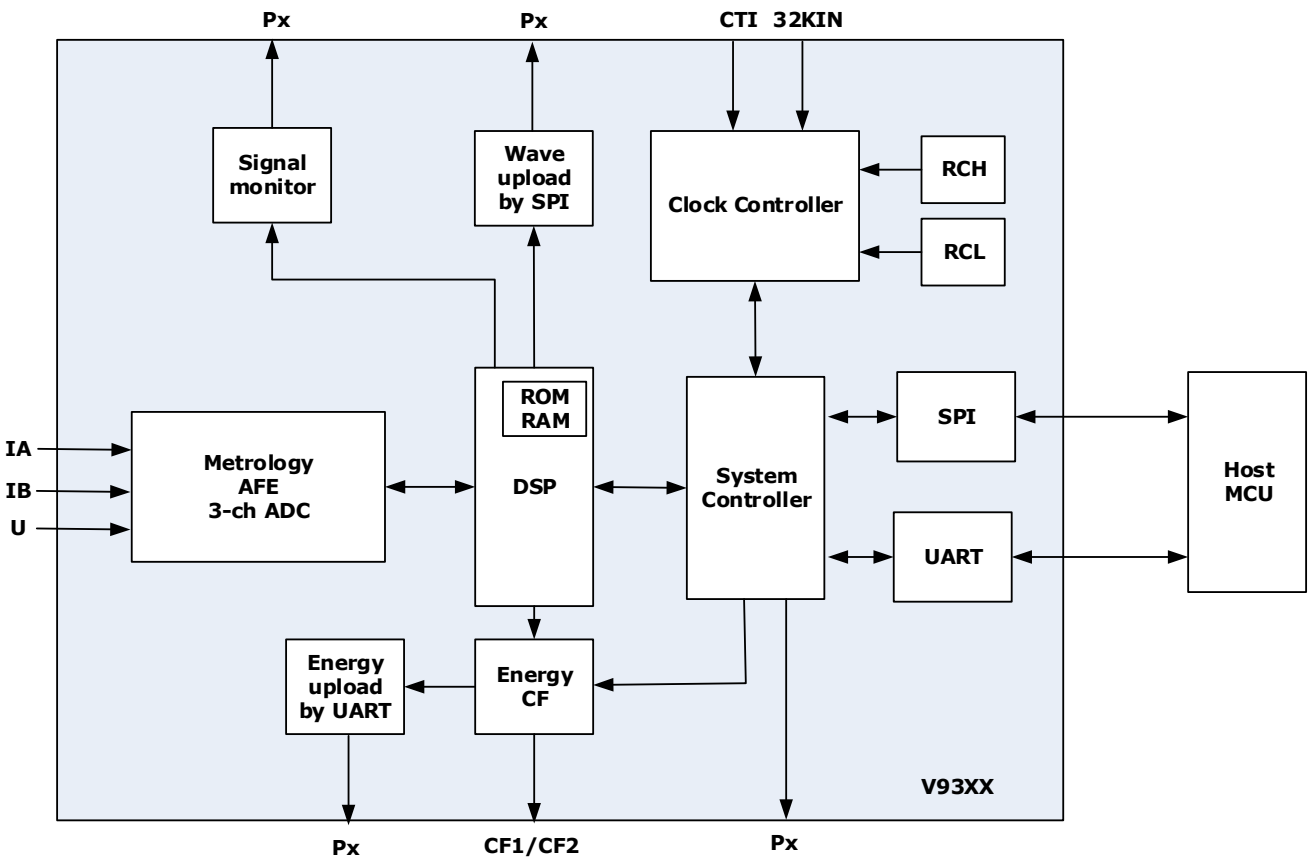

Figure 29-1 Functional block diagram

29.2. Bandgap circuit

The Bandgap circuit outputs a reference voltage and bias current, about 1.21V with a typical temperature coefficient of 10ppm/°C, for ADCs and the 6.5MHz RC oscillator. By default, the Bandgap circuit was enabled. This circuit consumes about 0.09mA (typical).

Users can configure RESTL<1:0> (Bit[4:3]) and REST<2:0> (Bit[2:0]) of analog control register (0x01, ANA_CTRL1) to adjust the temperature coefficient of Bandgap circuit to cancel the temperature coefficient introduced by the external components, with the following steps:

1) Assume the current settings of relative bits are REST<2:0>='010' and RESTL<1:0>='00', which corresponds to the temperature coefficient of Bandgap is +14ppm.

2) Measure meter errors in high and low temperature conditions. For example, this meter has 0 error at 20℃, and the measuring errors are 0.6% at 80℃ and -0.4% at -40℃ respectively. Then a -(0.6%-(-0.4%))/2=-0.5% measuring error needs to be compensated relative to high temperature working condition, equivalent to -0.5%/(80-20)=-5000/60=-83ppm.

3) As measured error is minus two times of Reference temperature coefficient error, to compensate

a -83ppm error, an additional +41.5ppm of Bandgap REF temperature coefficient adjustment is needed. Taking the initial +14ppm setting into consideration, the actual adjustment should be +55.5ppm. According to the lookup table of RESTL<1:0> and REST<2:0>, user should set register RESTL<1:0> to '11' and REST<2:0> to '000', whose combination equals to a +56ppm temperature coefficient adjustment.

Attention: For the adjustment of Reference temperature parameters would influence the basic error; therefore, when customers designed each new product, please first confirm the temperature parameter of Reference then calibrate the error of the meter.

A temperature coefficient drift of x in the Bandgap circuit results in a drift of -2x in the measurement error.

Table 29-1 Register for Bandgap Circuit

Register	Bit	Default Value	Description
ANA_CTRL1	Bit[4:3] RESTL<1:0>	0	To roughly adjust the temperature coefficient of the Bandgap circuit. 00: 0 ppm 01: -58 ppm 10: +111 ppm 11: +56 ppm In order to obtain the best metering performance and temperature performance during normal metering, it must be iterated according to the calculated result.
	Bit[2:0] REST<2:0>	0	To finely adjust the temperature coefficient of the Bandgap circuit 000: 0 ppm 001: +7 ppm 010: +14 ppm 011: +28 ppm 100: -32 ppm 101: -21 ppm 110: -14 ppm 111: -7 ppm In order to obtain the best metering performance and temperature performance during normal metering, it must be iterated according to the calculated result.

29.3. Registers

All register will be reset to default value which are hexadecimal when V94XX is in the reset state. There are four kinds of reset conditions, including power on reset (POR) external pin reset, global software reset, and RX reset.

29.3.1. Registers List

Table 29-2 Register list

Register	Type	Address	Description	Default
ANA_CTRL0	R/W	0x00	Analog Control Register 0.	0x00000000
ANA_CTRL1	R/W	0X01	Analog Control Register 1.	0x00000000
DSP_CTRL0	R/W	0x02	Metering Control Register 0.	0x00000000
DSP_CTRL1	R/W	0x03	Metering Control Register 1.	0x00000000
DSP_CTRL2	R/W	0x04	Metering Control Register 2.	0x00000000
DSP_CTRL3	R/W	0x05	Metering Control Register 3.	0x00000000
DSP_CTRL4	R/W	0x06	Metering Control Register 4.	0x00000000
DSP_CTRL5	R/W	0x07	Metering Control Register 5.	0x00000000
DSP_DAT_PA	R	0x08	Instantaneous Active Power of channel A.	--
DSP_DAT_QA	R	0x09	Instantaneous Reactive Power of channel A.	--
DSP_DAT_SA	R	0x0A	Instantaneous Apparent Power of channel A.	--
DSP_DAT_PB	R	0x0B	Instantaneous Active Power of channel B.	--
DSP_DAT_QB	R	0x0C	Instantaneous Reactive Power of channel B.	--
DSP_DAT_SB	R	0x0D	Instantaneous Apparent Power of channel B.	--
DSP_DAT_RMS0UA	R	0x0E	Instantaneous RMS of Voltage.	--
DSP_DAT_RMS0IA	R	0x0F	Instantaneous RMS of current A.	--
DSP_DAT_RMS0IB	R	0x10	Instantaneous RMS of Current B.	--
DSP_DAT_CH1	R	0x11	Instantaneous Value of Fundamental wave of Channel 1.	--
DSP_DAT_CH2	R	0x12	Instantaneous Value of Fundamental wave of Channel 2.	--
DSP_DAT_PA1	R	0x13	Average Active Power of Channel A.	--
DSP_DAT_QA1	R	0x14	Average Reactive Power of Channel A.	--
DSP_DAT_SA1	R	0x15	Average Apparent Power of Channel A.	--
DSP_DAT_PB1	R	0x16	Average Active power of Channel B.	--
DSP_DAT_QB1	R	0x17	Average Reactive power of Channel B.	--
DSP_DAT_SB1	R	0x18	Average Apparent Power of Channel B.	--
DSP_DAT_RMS1U	R	0x19	Average RMS of Voltage.	--
DSP_DAT_RMS1IA	R	0x1A	Average RMS of Current A.	--
DSP_DAT_RMS1IB	R	0x1B	Average RMS of Current B.	--
DSP_DAT_CH1_AVG	R	0x1C	Average value of Fundamental wave of Channel	--

			1.	
DSP_DAT_CH2_AVG	R	0x1D	Average value of Fundamental wave of Channel 2.	--
DSP_DAT_RMSU_AVG	R	0x1E	Average RMS of Voltage for 10 or 12 cycles (chose by line frequency).	--
DSP_DAT_RMSIA_AVG	R	0x1F	Average RMS of Current IA for 10 or 12 cycles (chose by line frequency).	--
DSP_DAT_RMSIB_AVG	R	0x20	Average RMS of Current IB for 10 or 12 cycles (chose by line frequency).	--
DSP_DAT_FRQ	R	0x21	Line Frequency.	--
DSP_DAT_DCU	R	0x22	DC value of voltage channel.	--
DSP_DAT_DCIA	R	0x23	DC value of current channel A.	--
DSP_DAT_DCIB	R	0x24	DC value of Current channel B.	--
DSP_CFG_CALI_PA	R/W	0x25	To set gain calibration for the active power A.	0x00000000
DSP_CFG_DC_PA	R/W	0x26	To set offset calibration for the active power A.	0x00000000
DSP_CFG_CALI_QA	R/W	0x27	To set gain calibration for Reactive power A.	0x00000000
DSP_CFG_DC_QA	R/W	0x28	To set offset calibration for Reactive power A.	0x00000000
DSP_CFG_CALI_PB	R/W	0x29	To set gain calibration for Active power B.	0x00000000
DSP_CFG_DC_PB	R/W	0x2A	To set offset calibration for Active power B.	0x00000000
DSP_CFG_CALI_QB	R/W	0x2B	To set gain calibration for Reactive power B.	0x00000000
DSP_CFG_DC_QB	R/W	0x2C	To set offset calibration for Reactive power B.	0x00000000
DSP_CFG_CALI_RMSU	R/W	0x2D	To set gain calibration for Voltage RMS.	0x00000000
DSP_CFG_RMS_DCU	R/W	0x2E	To set offset calibration for Voltage RMS.	0x00000000
DSP_CFG_CALI_RMSIA	R/W	0x2F	To set gain calibration for Current RMS A.	0x00000000
DSP_CFG_RMS_DCIA	R/W	0x30	To set offset calibration for Current RMS A.	0x00000000
DSP_CFG_CALI_RMSIB	R/W	0x31	To set gain calibration for Current RMS B.	0x00000000
DSP_CFG_RMS_DCIB	R/W	0x32	To set offset calibration for Current RMS B.	0x00000000
DSP_CFG_PHC	R/W	0x33	Phase Error Calibration Register. [10:0]= phase error calibration value for channel A [26:16]= phase error calibration value for channel B, where the range is from -766~767.	0x00000000
DSP_CFG_DCU	R/W	0x34	To set the DC calibration for the voltage channel.	0x00000000
DSP_CFG_DCIA	R/W	0x35	To set the DC calibration for the current channel A.	0x00000000
DSP_CFG_DCIB	R/W	0x36	To set the DC calibration for the current channel B.	0x00000000
DSP_CFG_BPF	R/W	0x37	Band-pass filter coefficient. Related to setting the DSP_MODE by Bit[7:4] of metering control register 0 (0x02,DSP_CTRL0). Setting 0x806764B6 at DSP_MODE=0, 1, 2;	0x00000000

			Setting 0x80DD7A8C at DSP_MODE=6,7; Setting 0x82B465F0 at DSP_MODE=8. The frequency of other modes would be not supported to measure, so setting to 0x0.	
DSP_CFG_CKSUM	R/W	0x38	Configuration register for checksum.	0x00000000
EGY_PROCTH	R/W	0x39	Anti-creep threshold for energy accumulator. When the accumulated value of the anti-creep energy accumulator over this threshold and the accumulated value of the high-speed energy accumulator under this threshold, the accumulated value of the high-speed energy accumulator will be cleared.	0x00000000
EGY_PWRTH	R/W	0x3A	Accumulation threshold for energy accumulator. Because the energy accumulator was 46Bit, the accumulated value of the high-speed energy accumulator equals to this threshold*16384; the accumulated value of the low-speed energy accumulator equals to this value*4.	0x00000000
EGY_CONST1	R/W	0x3B	Energy accumulator 1 accumulating constant.	0x00000000
EGY_OUT1L	R/W	0x3C	Energy accumulator 1 accumulating lower bit.	0x00000000
EGY_OUT1H	R/W	0x3D	Energy accumulator 1 accumulating higher bit. Effective for lower 14 bit.	0x00000000
EGY_CFCNT1	R	0x3E	Energy accumulator 1 pulse counter.	0x00000000
EGY_CONST2	R/W	0x3F	Energy accumulator 2 accumulating constant.	0x00000000
EGY_OUT2L	R/W	0x40	Energy accumulator 2 accumulating lower bit.	0x00000000
EGY_OUT2H	R/W	0x41	Energy accumulator 2 accumulating higher bit. Effective for lower 14 bit.	0x00000000
EGY_CFCNT2	R	0x42	Energy accumulator 2 pulse counter.	0x00000000
EGY_CONST3	R/W	0x43	Energy accumulator 3 accumulating constant.	0x00000000
EGY_OUT3	R/W	0x44	Energy accumulator 3 accumulating value.	0x00000000
EGY_CFCNT3	R	0x45	Energy accumulator 3 pulse counter.	0x00000000
EGY_CONST4	R/W	0x46	Energy accumulator 4 accumulating constant.	0x00000000
EGY_OUT4	R/W	0x47	Energy accumulator 4 accumulating value.	0x00000000
EGY_CFCNT4	R	0x48	Energy accumulator 4 pulse counter.	0x00000000
EGY_CONST5	R/W	0x49	Energy accumulator 5 accumulating constant.	0x00000000
EGY_OUT5	R/W	0x4A	Energy accumulator 5 accumulating value.	0x00000000
EGY_CFCNT5	R	0x4B	Energy accumulator 5 pulse counter.	0x00000000
EGY_CONST6	R/W	0x4C	Energy accumulator 6 accumulating constant.	0x00000000
EGY_OUT6	R/W	0x4D	Energy accumulator 6 accumulating value.	0x00000000
EGY_CFCNT6	R	0x4E	Energy accumulator 6 pulse counter.	0x00000000
EGY_CONST7	R/W	0x4F	Energy accumulator 7 accumulating constant.	0x00000000
EGY_OUT7	R/W	0x50	Energy accumulator 7 accumulating value.	0x00000000
EGY_CFCNT7	R	0x51	Energy accumulator 7 pulse counter.	0x00000000

EGY_CONST8	R/W	0x52	Energy accumulator 8 accumulating constant.	0x00000000
EGY_OUT8	R/W	0x53	Energy accumulator 8 accumulating value.	0x00000000
EGY_CFCNT8	R	0x54	Energy accumulator 8 pulse counter.	0x00000000
DSP_OV_THL	R/W	0x55	To set the lower threshold for the power-creep detection.	0x00000000
DSP_OV_THH	R/W	0x56	To set the upper threshold for the power-creep detection.	0x00000000
DSP_SWELL_THL	R/W	0x57	To set the lower threshold for the voltage swell.	0x00000000
DSP_SWELL_THH	R/W	0x58	To set the upper threshold for the voltage dip.	0x00000000
DSP_DIP_THL	R/W	0x59	To set the lower threshold for the voltage dip.	0x00000000
DSP_DIP_THH	R/W	0x5A	To set the upper threshold for the voltage dip.	0x00000000
FD_OVTH	R/W	0x5B	To set over-voltage threshold for fast detection. Bit width is 30bit.	0x00000000
FD_LVTH	R/W	0x5C	To set under-voltage threshold for fast detection. Bit width is 30bit.	0x00000000
FD_IA_OCTH	R/W	0x5D	To set over-current threshold in current channel A for fast detection. Bit width is 30bit.	0x00000000
FD_IA_LCTH	R/W	0x5E	To set under-current threshold in current channel A for fast detection. Bit width is 30bit.	0x00000000
FD_IB_OCTH	R/W	0x5F	To set over-current threshold in current channel B for fast detection. Bit width is 30bit.	0x00000000
FD_IB_LCTH	R/W	0x60	To set under-current threshold in current channel B for fast detection. Bit width is 30bit.	0x00000000
DSP_PHS_STT	R/W	0x61	To control the phase measurement. Enable phase measurement once for writing operation.	--
DSP_PHS_U	R	0x62	Voltage phase.	1
DSP_PHS_UN	R	0x63	Voltage waveform data which before zero-crossing.	0
DSP_PHS_UP	R	0x64	Voltage waveform data which after zero-crossing.	0x80000000
DSP_PHS_I	R	0x65	Current phase.	1
DSP_PHS_IN	R	0x66	Current waveform data which before zero-crossing.	0
DSP_PHS_IP	R	0x67	Current waveform data which after zero-crossing.	0x80000000
TEMPERATE	R	0x68	Temperature Register.	0
DAT_WAVE	R	0x69	Waveform data reading. It can repeatable reading the address and obtain the overall waveform data. If there is no need to read all data, it would be reset the bit 31 of DSP_CTRL5 to read address.	0
DAT_SWELL_CNT	R/C	0x6A	Voltage swell time records, half-wave as unit.	0

			Effective as 24bit. Writing any value into this address would be clear this counter to zero.	
DAT_DIP_CNT	R/C	0x6B	Voltage dip time records, half wave as unit. Effective as 24bit. Writing any value into this address would be clear this counter to zero.	0
SYS_SFTRST	W	0x6C	Software reset register. Writing 0x4572beaf into this address would be happen software reset once.	--
SYS_BAUDCNT1	R	0x70	This register stores the system clock count value of the first bit of the UART frame header sent by V94XX.	--
SYS_BAUDCNT8	R	0x71	This register stores the system clock count value of the 8 bits of the UART frame header received by V94XX.	--
SYS_INTSTS	R/C	0x72	Interrupt status register.	--
SYS_INTEN	R/W	0x73	Interrupt enable register.	0x00000000
SYS_STS	R	0x74	System status register.	--
SYS_MISC	R/W	0x75	System control register.	--
SYS_BLK0_ADDR	R/W	0x79	Register for block reading address 0.	0
SYS_BLK1_ADDR	R/W	0x7A	Register for block reading address 1.	0
SYS_BLK2_ADDR	R/W	0x7B	Register for block reading address 2.	0
SYS_BLK3_ADDR	R/W	0x7C	Register for block reading address 3.	0
SYS_IOCFGX0	R/W	0x7D	Output configuration register for P0, P1, P2 and P3.	0
SYS_IOCFGX1	R/W	0x7E	Output configuration register for P4, P5 and P6.	0
SYS_VERSION	R	0x7F	Present hardware version.	--

29.3.2. Analog Control Registers

When power-on reset (POR), RSTN pin reset, RX reset, or global software reset occurs, all analog control registers will be reset to the default value. The default value in the following tables of this section are in format of hexadecimal.

The address range of Analog Control Register is 0x00~0x01 which all is readable and writable. Also, all the metering control registers need to be configuration verification and self-checking.

29.3.2.1. ANA_CTRL0 Register

Table 29-3 Analog Control Register 0 (0x00, ANA_CTRL0)

0x00, R/W, Analog Control Register 0, ANA_CTRL0			
Bit		**Default Value**	**Description**
31:19	Reserved	0	These bits must hold its default value for proper operation.
18	RCHX1P2	0	To enable the increase 6.5M RC oscillator frequency by 1.2X. It needs to set to 1 when the line frequency equals to 60Hz. 0: X1 1: X1.2
17:14	Reserved	0	These bits must hold its default value for proper operation.
13	MEA	0	To select the analog input for Channel IB. 0: differential IB input 1: internal temperature sensor
12	Reserved	0	The bit must hold its default value for proper operation.
11	SHORT_I	0	Current IA and current IB channel ADC input short circuit. 0: short circuit 1: Normal
10	SHORT_V	0	Voltage U channel ADC input short circuit. 0: short circuit 1: Normal
9:0	Reserved	0	These bits must hold its default value for proper operation.

29.3.2.2. ANA_CTRL1 Register

Table 29-4 Analog Control Register 1 (0x01, ANA_CTRL1)

0x01, R/W, Analog Control Register 1, ANA_CTRL1			
Bit		**Default Value**	**Description**
31:30	ADCKSEL[1:0]	0	The options of clock frequency divider rate for the ADC 00 corresponds to 819.2 KHz.

0x01, R/W, Analog Control Register 1, ANA_CTRL1			
Bit		**Default Value**	**Description**
			00: ×1 01: ×2 10: ×1/4 11: ×1/2
29:24	RCHTRIM[5:0]	0	To adjust the 6.5M RC frequency. 000000~011111: step-up the frequency by 1.25% 100000~111111: step-down the frequency by 1.25%
23	Reserved	0	The bit must hold its default value for proper operation.
22	RCCLK_PD	0	To enable the 6.5M RC oscillator. 0: enable 1: disable This bit must be set to 0 for proper operation.
21:15	Reserved	0	These bits must hold its default value for proper operation.
14:12	GIB[2:0]	0	To adjust the gain of current ADC in the channel B. 000: 4 001: 1 010: 32 011: 16 100/101/110/111: prohibited GIB[2:0] is recommended set to 000 for proper operation.
11	GU	0	To adjust the gain of voltage ADC. 0: 8 1: 4 This bit must be set to 0 for proper operation.

0x01, R/W, Analog Control Register 1, ANA_CTRL1			
Bit		**Default Value**	**Description**
10:8	GIA[2:0]	0	To adjust the gain of current ADC in the channel A. 000: 32 001: 16 010: 4 011: 1 100~111: prohibited GIA[2: 0] is recommended set to 000 for proper operation.
7	XRST_PD	0	The external input CTI clock enable. 0: enable 1: disable
6:5	Reserved	0	These bits must hold its default value for proper operation.
4:3	RESTL[1:0]	0	To roughly adjust the temperature coefficient of the Bandgap circuit. 00: 0 ppm 01: -58 ppm 10: +111 ppm 11: +56 ppm
2:0	REST[2:0]	0	To finely adjust the temperature coefficient of the Bandgap circuit. 000: 0 ppm 001: +7 ppm 010: +14 ppm 011: +28 ppm 100: -32 ppm 101: -21 ppm 110: -14 ppm 111: -7 ppm

29.3.3. System Control & Status Register

When power-on reset (POR), RSTN pin reset, RX reset, or global software reset occurs, all system control

registers will be reset to the default value. The default value in the following tables of this section are in format of hexadecimal.

In the V94XX, the mainly functions of System Control Register is controlling interface, interrupt, RAM, and IO output. SYS_INTEN (0x73) controls enable interruption, SYS_INTSYS (0x72) is interrupted status register. Bit[4: 0] of SYS_MISC (0x75) are used for configuring the interface operation, interrupting pin output whether reverse, whether turn off the energy accumulator when power down and whether turn off the energy accumulator when in wrong calibration. SYS_RAMADDR (0x77) is controlling internal RAM address. SYS_RAMDATA is internal RAM data registers. SYS_BLK0_ADDR~SYS_BLK3_ADDR are blocked reading address. SYS_IOCFGX0~SYS_IOCFGX1 are the control register of IO output

29.3.3.1. SYS_BAUDCNT1 Register

Table 29-5 UART transmitting data 1bit count value (0x70, SYS_BAUDCNT1)

0x70, UART transmitting data 1bit count value, SYS_BAUDCNT1				
bit		**R/W**	**Default Value**	**Description**
31:14	-	-	-	Reserved.
13:0	BAUDCNT1	R		This register stores the system clock count value of the first bit of the UART frame header sent by V94XX.

29.3.3.2. SYS_BAUDCNT8 Register

Table 29-6 UART receiving data 8bit count value (0x71, SYS_BAUDCNT8)

0x71, UART receiving data 8bit count value, SYS_BAUDCNT8				
Bit		**R/W**	**Default Value**	**Description**
31:17	-	-	-	Reserved.
16:0	BAUDCNT8	R		This register stores the system clock count value of the 8 bits of the UART frame header received by V94XX.

29.3.3.3. SYS_ INTSTS Register

Table 29-7 System Interrupt Register (0x72, SYS_INTSTS)

0x72, System Interrupt Register, SYS_INTSTS				
Bit		**R/W**	**Default value**	**Description**
31:28	-	-	-	Reserved.

0x72, System Interrupt Register, SYS_INTSTS				
Bit		**R/W**	**Default value**	**Description**
27	UDIP	R/C	0	Flag bit for the voltage dip. Read 0: the voltage dip did not happen Read 1: the voltage dip happened Write 0: no effects Write 1: clear the bit
26	USWELL	R/C	0	Flag bit for the voltage swell. Read 0: the voltage swell did not happen Read 1: the voltage swell happened Write 0: no effects Write 1: clear the bit
25	IBLC	R/C	0	Flag bit for the IB under-current. Read 0: IB under-current did not happen Read 1: IB under-current happen Write 0: no effects Write 1: clear the bit
24	IBOC	R/C	0	Flag bit for the IB over-current. Read 0: IB over-current did not happen Read 1: IB over-current happened Write 0: no effects Write 1: clear the bit
23	IALC	R/C	0	Flag bit for the IA under-current. Read 0: IA under-current did not happen Read 1: IA under-current happened Write 0: no effects Write 1: clear the bit
22	IAOC	R/C	0	Flag bit for the IA over-current. Read 0: IA over-current did not happen Read 1: IA over-current happened Write 0: no effects Write 1: clear the bit
21	ULV	R/C	0	Flag bit for the channel U under-voltage. Read 0: channel U under-voltage did not happen Read 1: channel U under-voltage happened Write 0: no effects Write 1: clear the bit

0x72, System Interrupt Register, SYS_INTSTS				
Bit		**R/W**	**Default value**	**Description**
20	UOV	R/C	0	Flag bit for the channel U over-voltage. Read 0: channel U over-voltage did not happen Read 1: channel U over-voltage happened Write 0: no effects Write 1: clear the bit
19	SPI_ERR	R/C	0	Flag bit for the SPI communication error. When any one of condition below happens, the bit will set to "1". A, SPI overtime (rising edge of each 2 SPCK needs to shorter than 20ms) B, SPI CLK counter error (the number of clocks not equals to 48 at 4-wire SPI) Read 0: SPI error did not happen Read 1: SPI error happened write 0: no effects write 1: clear the bit
18:17	Reserved	-	-	-
16	UART_ERR	R/C	0	Flag bit for the UART communication error. When any one of condition as below happens, the bit will set to "1". A: UART overtime (each 2 Bytes needs to shorter than 20ms) B: UART checksum bit error C: UART checksum byte error Read 0: UART error did not happen Read 1: UART happened write 0: no effects write 1: clear the bit
15	DMA_FINISH	R/C	0	Flag bit for active waveform uploading finished. Read 0: active waveform uploading did not finish Read 1: active waveform uploading finished Write 0: no effects Write 1: clear the bit
14	CKERR	R/C		Flag bit for checksum error. Checksum from correct to error, it would be interrupted. Read 0: checksum error did not happen Read 1: checksum error happened Write 0: no effects Write 1: clear the bit

0x72, System Interrupt Register, SYS_INTSTS				
Bit		**R/W**	**Default value**	**Description**
13	HSE_FAIL	R/C		Flat bit for CTI external input clock status. Read 0: CTI external input clock error has occurred l did not happen Read 1: CTI external input clock error has happened Write 0: no effects Write 1: clear the bit
12	REF_ERR	R/C		Flag bit for reference error Read 0: reference error did not happen Read 1: reference error happened Write 0: no effects Write 1: clear the bit
11	BIST_ERR	R/C		Flag bit for BIST error Read 0: BIST error did not happen Read 1: BIST error happened Write 0: no effects Write 1: clear the bit
10	ISIGN	R/C		Flag bit for current zero-crossing, it could to select the channel IA or IB by bit20 of metering control register (Table 29-20 Metering Control Register 2 (0x03, DSP_CTRL1)), and to select the direction of zero-crossing by bit19~bit18 of metering control register (0x03,DSP_CTRL1). Read 0: current zero-crossing did not happen Read 1: current zero-crossing happened Write 0: no effects Write 1: clear the bit
9	USIGN	R/C		Flag bit for voltage zero-crossing, it could to select the direction of zero-crossing by bit19~bit18 of DSP_CTRL1 Read 0: voltage zero-crossing did not happen Read 1: voltage zero-crossing happened Write 0: no effects Write 1: clear the bit
8	WAVE_OVERFLOW	R/C	0	Flag bit for waveform storage overflow. Read 0: waveform storage did not overflow Read 1: waveform storage already overflowed Write 0: no effects Write 1: clear the bit

0x72, System Interrupt Register, SYS_INTSTS				
Bit		**R/W**	**Default value**	**Description**
7	WAVE_STORE	R/C	0	Flag bit for waveform storage status. Read 0: waveform storage did not finish Read 1: waveform storage already finished Write 0: no effects Write 1: clear the bit
6	WAVE_UPD	R/C	0	Flag bit for waveform updating. Read 0: waveform data did not update Read 1: waveform data updated Write 0: no effects Write 1: clear the bit
5	CURRMS_UPD	R/C	0	Flag bit for instantaneous RMS data updating. Read 0: instantaneous RMS data did not update Read 1: instantaneous RMS data updated Write 0: no effects Write 1: clear the bit
4	AVGRMS_UPD	R/C	0	Flag bit for average RMS data updating. Read 0: average RMS data did not update Read 1: average RMS data updated Write 0: no effects Write 1: clear the bit
3	CURPOWER_UPD	R/C	0	Flag bit for instantaneous power data updating. Read 0: instantaneous power data did not update Read 1: instantaneous power data updated Write 0: no effects Write 1: clear the bit
2	AVGPOWER_UPD	R/C	0	Flag bit for average power data updating. Read 0: average power data did not update Read 1: average power data updated Write 0: no effects Write 1: clear the bit
1	INTPDN	R/C	0	Flag bit for power down event. When the power input (VDD) is lower than 2.8V (±7%), it would be triggered. Read 0: power down did not happen Read 1: power down happened Write 0: no effects Write 1: clear the bit

0x72, System Interrupt Register, SYS_INTSTS				
Bit		**R/W**	**Default value**	**Description**
0	INTUPHSDONE	R/C	0	Flag bit for Phase measurement finished. This bit will clear automatically when starts to phase measurement. Read 0: phase measurement did not finish Read 1: phase measurement already finished Write 0: no effects Write 1: clear the bit

29.3.3.4. SYS_INTEN Register

Table 29-8 System Interrupt Enable Register (0x73, SYS_INTEN)

0x73, System Interrupt Enable Register, SYS_INTEN				
Bit		**R/W**	**Default Value**	**Description**
31:28	Reserved		0	These bits must hold its default value for proper operation.
27	UDIP	R/W	0	Interrupt for the voltage dip. 0: disable interrupt 1: enable interrupt
26	USWELL	R/W	0	Interrupt for voltage swell. 0: disable interrupt 1: enable interrupt
25	IBLC	R/W	0	Interrupt for IB under-current. 0: disable interrupt 1: enable interrupt
24	IBOC	R/W	0	Interrupt for IB over-current. 0: disable interrupt 1: enable interrupt
23	IALC	R/W	0	Interrupt for IA under-current. 0: disable interrupt 1: enable interrupt
22	IAOC	R/W	0	Interrupt for IA over-current. 0: disable interrupt 1: enable interrupt
21	ULV	R/W	0	Interrupt for channel U under-voltage. 0: disable interrupt 1: enable interrupt

0x73, System Interrupt Enable Register, SYS_INTEN				
Bit		**R/W**	**Default Value**	**Description**
20	UOV	R/W	0	Interrupt for channel U over-voltage. 0: disable interrupt 1: enable interrupt
19	SPI_ERR	R/W	0	Interrupt for SPI transmission error. 0: disable interrupt 1: enable interrupt
18:17	Reserved			These bits must hold its default value for proper operation.
16	UART_ERR	R/W	0	Interrupt for UART transmission error. 0: disable interrupt 1: enable interrupt
15	DMA_FINISH	R/W	0	Waveform uploading finished. 0: disable interrupt 1: enable interrupt
14	CKERR	R/W	0	Interrupt for checksum error. 0: disable interrupt 1: enable interrupt
13	HSE_FAIL	R/W	0	Interrupt for CTI external input clock error. 0: disable interrupt 1: enable interrupt
12	REF_ERR	R/W	0	Interrupt for reference error. 0: disable interrupt 1: enable interrupt
11	BOST_ERR	R/W	0	Interrupt for BIST error. 0: disable interrupt 1: enable interrupt
10	ISIGN	R/W	0	Interrupt for the current zero-crossing. 0: disable interrupt 1: enable interrupt
9	USIGN	R/W	0	Interrupt for the voltage zero-crossing. 0: disable interrupt 1: enable interrupt
8	WAVE_OVERFLOW	R/W	0	Interrupt for the Waveform storage overflow. 0: disable interrupt 1: enable interrupt

0x73, System Interrupt Enable Register, SYS_INTEN				
Bit		**R/W**	**Default Value**	**Description**
7	WAVE_STORE	R/W	0	Interrupt for the Waveform storage status. 0: disable interrupt 1: enable interrupt
6	WAVE_UPD	R/W	0	Interrupt for the Waveform data updating. 0: disable interrupt 1: enable interrupt
5	CURRMS_UPD	R/W	0	Interrupt for the Instantaneous RMS data updating. 0: disable interrupt 1: enable interrupt
4	AVGRMS_UPD	R/W	0	Interrupt for the average RMS data updating. 0: disable interrupt 1: enable interrupt
3	CURPOWER_UPD	R/W	0	Interrupt for the Instantaneous power data updating. 0: disable interrupt 1: enable interrupt
2	AVGPOWER_UPD	R/W	0	Interrupt for the Average power data updating. 0: disable interrupt 1: enable interrupt
1	INTPDN	R/W	0	Interrupt for the Power down. 0: disable interrupt 1: enable interrupt
0	INTUPHSDONE	R/W	0	Interrupt for the Phase measurement finished. 0: disable interrupt 1: enable interrupt

29.3.3.5. SYS_STS Register

Table 29-9 System Status Register (0x74, SYS_STS)

0x74, System Status Register, SYS_STS				
Bit		**R/W**	**Default Value**	**Description**
31	-	-	-	Reserved

0x74, System Status Register, SYS_STS				
Bit		**R/W**	**Default Value**	**Description**
30	UDIP	R	0	Status bit for the voltage dip. 0: not happened 1: happened
29	USWELL	R	0	Status bit for voltage swell. 0: not happened 1: happened
28	IBLC	R	0	Status bit for IB under-current. 0: not happened 1: happened
27	IBOC	R	0	Status bit for IB over-current. 0: not happened 1: happened
26	IALC	R	0	Status bit for IA under-current. 0: not happened 1: happened
25	IAOC	R	0	Status bit for IA over-current. 0: not happened 1: happened
24	ULV	R	0	Status bit for channel U under-voltage. 0: not happened 1: happened
23	UOV	R	0	Status bit for channel U over-voltage. 0: not happened 1: happened
22:20	RST_SOURCE	R	-	Status bit for reset. 1: power on reset 2: external reset 3: RX low-level voltage reset 4: software reset Others are reserved.
19	CRP_OUT2	R	0	Status bit for power-creep detection for energy accumulator 2. 0: start 1: power-creep

0x74, System Status Register, SYS_STS				
Bit		**R/W**	**Default Value**	**Description**
18	CRP_OUT1	R	0	Status bit for power-creep detection for energy accumulator 1. 0: start 1: power-creep
17	SBCREEP	R	-	Status bit for no-load detection for apparent power Channel B. 0: start 1: power-creep
16	QBCREEP	R	-	Status bit for power-creep detection for reactive power Channel B. 0: start 1: power-creep
15	PBCREEP	R	-	Status bit for power-creep detection for active power Channel B. 0: start 1: power-creep
14	SACREEP	R	-	Status bit for power-creep detection for apparent power Channel A. 0: start 1: power-creep
13	QACREEP	R	-	Status bit for power-creep detection for reactive power Channel A. 0: start 1: power-creep
12	PACREEP	R	-	Status bit for power-creep detection for active power Channel A. 0: start 1: power-creep
11	QBSIGN	R	0	Sign bit for reactive power Channel B. Under the power-creep detection, no refresh the flag bit. 0: positive 1: negative
10	PBSIGN	R	0	Sign bit for active power Channel B. Under the power-creep detection, no refresh the flag bit. 0: positive 1: negative

0x74, System Status Register, SYS_STS				
Bit		**R/W**	**Default Value**	**Description**
9	QASIGN	R	0	Sign bit for reactive power Channel A. Under the power-creep detection, no refresh the flag bit. 0: positive 1: negative
8	PASIGN	R	0	Sign bit for active power Channel A. Under the power-creep detection, no refresh the flag bit. 0: positive 1: negative
7	-	-	-	Reserved
6	HSEFAIL	R	0	Status bit for CTI external input clock status. 0: normal 1: abnormal
5	BISTERR	R	0	Status bit for SRAM BIST. 0: SRAM BIST normal 1: SRAM BIST error
4	RAMINITIAL		0	Status bit for RAM initialization finished 0: failed 1: finished
3	PHSDONE		0	Status bit for Phase measurement finished 0: failed 1: finished
2	PD	R	0	Status bit for power down. When the power input (VDD) is lower than 2.8V (±7%), power down event happens. 0: VDD >= 2.8V (±7%) 1: VDD < 2.8V (±7%)
1	REFLK	R	0	Status bit for the reference of ADC whether electric leaking. 0: ADC reference circuit normal 1: ADC reference circuit decrease is greater than 2.5%.
0	CHECKSUM	R	1	Status bit for Checksum. Checksum calculation address range: 0x0~0x7, 0x25~0x3A, 0x55~0x60 0: checksum correct 1: checksum incorrect

29.3.3.6. SYS_MISC Register

Table 29-10 System Control Register (0x75, SYS_MISC)

0x75, system Control Register, SYS_MISC				
Bit		**R/W**	**Default Value**	**Description**
31:25	Reserved	R	0	These bits must hold its default value for proper operation.
24:16	WAVE_STORE_CNT	R	0	Count value for Waveform storage.
15:5	Reserved		0	These bits must hold its default value for proper operation.
4	CK_EGY_EN	R/W	0	When checksum has error, force the energy accumulator and CF output to disable. 0: enable 1: disable
3	PD_EGY_EN	R/W	0	When power-down, force the energy accumulator and CF output to disable. 0: enable 1: disable
2	INTPOL	R/W	0	Reverse output on Interrupted pin. 0: interrupt pin triggered by high-level voltage, and default is low-level voltage. 1: interrupt pin triggered by low-level voltage, and default is high-level voltage.
1	UARTBURSTEN	R/W	0	To enable the UART continue writing mode. 0: enable 1: disable
0	UARTAUTOEN	R/W	0	To enable baud rate self-adapting for UART. It suggests enabling before changing system CLK. 0: disable Baud rate self-adapting function. Baud rate self-adapting only for first time communication. 1: enable Baud rate self-adapting function. Baud rate self-adapting for every time communication.

29.3.3.7. SYS_BLKX Register

Table 29-11 Block-reading Address Register 0 (0x79, SYS_BLK0_ADDR)

0x79, Block-reading Address Register 0, SYS_BLK0_ADDR				
Bit		**R/W**	**Default Value**	**Description**
31:24	ADDR3	R/W	0	Block-reading address 3.
23:16	ADDR2	R/W	0	Block-reading address 2.
15:8	ADDR1	R/W	0	Block-reading address 1.
7:0	ADDR0	R/W	0	Block-reading address 0.

Table 29-12 Block-reading Address Register 1 (0x7A, SYS_BLK1_ADDR)

0x7A, Block-reading Address Register 1, SYS_BLK1_ADDR				
Bit		**R/W**	**Default Value**	**Description**
31:24	ADDR7	R/W	0	Block-reading address 7.
23:16	ADDR6	R/W	0	Block-reading address 6.
15:8	ADDR5	R/W	0	Block-reading address 5.
7:0	ADDR4	R/W	0	Block-reading address 4.

Table 29-13 Block-reading Address Register 2 (0x7B, SYS_BLK2_ADDR)

0x7B, Block-reading Address Register 2, SYS_BLK2_ADDR				
Bit		**R/W**	**Default Value**	**Description**
31:24	ADDR11	R/W	0	Block-reading address 11.
23:16	ADDR10	R/W	0	Block-reading address 10.
15:8	ADDR9	R/W	0	Block-reading address 9.
7:0	ADDR8	R/W	0	Block-reading address 8.

Table 29-14 Block-reading Address Register 3 (0x7C, SYS_BLK3_ADDR)

0x7C, Block-reading Address Register 3, SYS_BLK3_ADDR				
Bit		**R/W**	**Default Value**	**Description**
31:24	ADDR15	R/W	0	Block-reading address 15.
23:16	ADDR14	R/W	0	Block-reading address 14.
15:8	ADDR13	R/W	0	Block-reading address 13.
7:0	ADDR12	R/W	0	Block-reading address 12.

29.3.3.8. SYS_IOCFGXX Register

Table 29-15 IO Configuration Register 0 (0x7D, SYS_IOCFGX0)

0x7D, IO Configuration Register 0, SYS_IOCFGX0				
Bit		**R/W**	**Default Value**	**Description**
31:24	P3CFG	R/W	0	Configuration as the same as P0CFG.
23:16	P2CFG	R/W	0	Configuration as the same as P0CFG.
15:8	P1CFG	R/W	0	Configuration as the same as P0CFG.
7:0	P0CFG	R/W	0	Bit[7:6]: 00: as shown in the Table 29-16, it can be configured the different combination interruption. 10: CF1 output. Bit[5:0] can be configured arbitrary value. 01: CF2 output. Bit[5:0] can be configured arbitrary value. 11: Actively energy accumulation data uploads. Bit[5:0] can be configured arbitrary value.

Table 29-16 P0CFG Bit[5:0] Description

Bit[5:3]	Bit[2:0]	Description
0	0	High impedance.
0	1	Current zero-crossing interruption.
0	2	Voltage zero-crossing interruption.
0	3	Current zero-crossing interruption.
0	4	Voltage zero-crossing interruption.
0	others	1st type interruption.
1	0	Waveform refresh interruption.
1	1	Instantaneous RMS refresh interruption.
1	2	Average RMS refresh interruption.
1	3	Instantaneous power refresh interruption.
1	4	Average power refresh interruption.
1	5	Waveform storage finish interruption.
1	6	Waveform storage address overflow interruption.
1	7	Waveform data upload finish interruption.
2	0	IB channel under-current interruption.

2	1	IB channel over-current interruption.
2	2	IA channel under-current interruption.
2	3	IA channel over-current interruption.
2	4	Voltage Channel under-voltage interruption.
2	5	Voltage Channel over-voltage interruption.
2	6	Voltage dip interruption.
2	7	Voltage swell interruption.
3	0	Reference error.
3	1	CTI external input clock error.
3	2	SPI communication error interruption.
3	3	UART communication error interruption.
3	4	Power-down interruption.
3	5	Parameter self-checking error interruption.
3	6	Phase test finish interruption.
3	7	RAM self-checking error.
4	0	1st type interruption.
4	1	2nd type interruption.
4	2	3rd type interruption.
4	others	4th type interruption.
5	0	3rd type interruption.
5	1	1st and 2nd type interruption.
5	2	1st and 3rd type interruption.
5	3	$1^{st}$and 4th type interruption.
5	4	2nd and 3rd type interruption.
5	5	2nd and 4th type interruption.
5	6	3rd and 4th type interruption.
5	7	All interruption.
6	0	1st, 2nd and 3rd type interruption.
6	1	1st, 2nd and 4th type interruption.
6	2	1st, 3rd and 4th type interruption.
6	3	2nd, 3rd and 4th type interruption.

6	others	All interruption.
7	1	Active waveform updating for chip select of SPI, SPIMAS_SPCSN.
7	2	Active waveform updating for SPI clock, SPIMAS_SPCK.
7	4	Active waveform updating for SPI data, SPIMAS_SPDO.
7	others	Prohibited output.

While the IO interface is not configured (i.e. all zero), output is high impedance.

- 1st type interruption: current zero-crossing interruption, voltage zero-crossing interruption
- 2nd type interruption: waveform refreshes interruption, instantaneous RMS refresh interruption, average RMS refreshes interruption, instantaneous power value refresh interruption, average power value refreshes interruption, waveform storage finish interruption, waveform storage overflow interruption and waveform data upload finished interruption.
- 3rd type interruption: IB channel under-current interruption, IB channel over-current interruption, IA channel under-current interruption, IA channel over-current interruption, voltage channel under-voltage interruption, voltage channel over-voltage interruption, voltage dip interruption and voltage swell interruption.
- 4th type interruption: SPI communicating error interruption, UART communicating error interruption, parameters self-checking error interruption, phase measurement finished interruption, power-down interruption, reference error interruption, CTI external input clock error interruption and RAM self-checking error interruption.

Table 29-17 IO Configuration Register 1 (0x7E, SYS_IOCFGX1)

0x7E, IO Configuration Register1, SYS_IOCFGX1				
Bit		**R/W**	**Default Value**	**Description**
31:24	Reserved		0	These bits must hold its default value for proper operation.
23:16	P6CFG	R/W	0	Configuration as the same as P0CFG.
15:8	P5CFG	R/W	0	Configuration as the same as P0CFG.
7:0	P4CFG	R/W	0	Configuration as the same as P0CFG.

29.3.3.9. SYS_VERSION Register

Table 29-18 Version Information Register (0x7F, SYS_VERSION)

0x7F, Version Information Register, SYS_VERSION				
Bit		**R/W**	**Default Value**	**Description**
31:0	VERSION	R	-	Present hardware version.

29.3.4. Metering Control Registers

When power-on reset (POR), RSTN pin reset, RX reset, or global software reset occurs, all metering control registers will be reset to the default value. The default value in the following tables of this section are in format of hexadecimal.

All the metering control registers need to be configuration verification and self-checking.

29.3.4.1. DSP_CTRL0 Register

Table 29-19 Metering Control Register 0 (0x02, DSP_CTRL0)

0x02, R/W, Metering Control Register 0, DSP_CTRL0				
Bit		**R/W**	**Default Value**	**Description**
31	CURDAT_RATE	R/W	0	Double refresh time for Instantaneous power value and RMS value. 0: refresh time for instantaneous power value is 20mS and instantaneous RMS value is 10mS. 1: refresh time for instantaneous power value is 40mS and instantaneous RMS value is 20mS.
30	Reserved		0	The bit must hold its default value for proper operation.
29:28	FRQ_SEL	R/W	0	Source comes from the register value of DSP_DAT_FRQ. 00: accumulation value for line frequency test value of 16 cycles (the default update time is 320ms) 01: line frequency test value of 1 cycle (the default update time is 20ms) 10: line frequency test value of 64 cycles (the default update time is 1280ms) 11: Reserved
27	DC_METER_MODE	R/W	0	To enable the DC metering mode. 0: disable 1: enable
26	DIDT_EN_B	R/W	0	To enable the Rogowski Coil in the channel B. 0: disable 1: enable

0x02, R/W, Metering Control Register 0, DSP_CTRL0				
Bit		**R/W**	**Default Value**	**Description**
25	DIDT_EN_A	R/W	0	To enable the Rogowski Coil in the channel A. 0: disable 1: enable
24	S_MODE	R/W	0	Source select for Apparent power calculation. 0: by RMS value 1: by power value
23:20	CFG_CHANNEL	R/W	0	fundamental Channel selectable. 0: channel 1, fundamental active power A; channel 2, fundamental active power B 1: channel 1, fundamental active power A; channel 2, fundamental voltage RMS 2: channel 1, fundamental active power A; channel 2, fundamental current RMS A 3: channel 1, fundamental active power A; channel 2, fundamental current RMS B 4: channel 1, fundamental active power B, channel 2, fundamental voltage RMS 5: channel 1, fundamental active power B; channel 2, fundamental current RMS A 6: channel 1, fundamental active power B; channel 2, fundamental current RMS B 7: channel 1, fundamental voltage RMS; channel 2, fundamental current RMS A 8: channel 1, fundamental voltage RMS, channel 2, fundamental current RMS B 9: channel 1, fundamental current RMS A; channel 2, fundamental current RMS B 10~15: the same as configured 0
19	QB_MODE	R/W	0	To select mode for Reactive power B. 0: total wave, reactive power 1: fundamental wave, reactive power

0x02, R/W, Metering Control Register 0, DSP_CTRL0				
Bit		**R/W**	**Default Value**	**Description**
18	QA_MODE	R/W	0	To select mode for Reactive power A. 0: total wave, reactive power 1: fundamental wave, reactive power
17	PQ_HPFSEL	R/W	0	Calculate the total power whether pass high-pass filter. 0: pass 1: not pass
16	FUND_HPFSEL	R/W	0	Calculate the fundamental data whether pass high-pass filter: 0: pass 1: not pass
15	RMSU_HPFSEL	R/W	0	Calculate the total voltage RMS data whether pass high-pass filter: 0: pass 1: not pass
14	RMSIA_HPFSEL	R/W	0	Calculate the total current IA RMS data whether pass high-pass filter: 0: pass 1: not pass
13	RMSIB_HPFSEL	R/W	0	Calculate current IB RMS data whether pass high-pass filter: 0: pass 1: not pass
12	RESPONSE_TIME	R/W	0	Metering data response time. 0: normal 1: 2 times
11:10	AVGRMS_RATE	R/W	0	Average RMS refresh time. 00: 40 ms 01: 80 ms 10: 320 ms 11: 640 ms

0x02, R/W, Metering Control Register 0, DSP_CTRL0				
Bit		**R/W**	**Default Value**	**Description**
9:8	AVGPQ_RATE	R/W	0	Average power refresh time. 00: 40 ms 01: 80 ms 10: 320 ms 11: 640 ms
7:4	DSP_MODE	R/W	0	DSP Operating Mode. 0: 128 sampling points per cycle by DSP at 6.5536MHz system clock 1: 64 sampling points per cycle by DSP at 6.5536MHz system clock 2: 32 sampling points per cycle by DSP at 6.5536MHz system clock. 3, 4, and 5: Reserved. 6: 64 sampling points per cycle by DSP at 3.2768MHz system clock 7: 32 sampling points per cycle by DSP at 3.2768MHz system clock 8: 32 sampling points per cycle by DSP at 819.2KHz system clock (supported only up to 2 channels instantaneous current RMS calculation.) 9: 16 sampling points per cycle by DSP at 409.6KHz system clock (supported only up to 2 channels instantaneous current RMS calculation.) Others: the same as mode 0
3	GRID_FRQ	R/W	0	To select the Line frequency. 0: 50 Hz 1: 60 Hz
2	ADCUEN	R/W	0	To enable the voltage channel (including ADC and DSP).
1	ADCIBEN	R/W	0	To enable the current channel B (including ADC and DSP).
0	ADCIAEN	R/W	0	To enable the current channel A (including ADC and DSP).

29.3.4.2. DSP_CTRL1 Register

Table 29-20 Metering Control Register 2 (0x03, DSP_CTRL1)

0x03, R/W, Metering Control Register 2, DSP_CTRL1				
Bit		**R/W**	**Default Value**	**Description**
31	BW_COMP	R/W	0	Automatic gain compensation for filter. By default, this function was enabled. This bit does not influence DC metering. It will automatic turn off during the DC metering. 0: enable 1: disable
30:22	Reserved		0	The bit must hold its default value for proper operation.
23	EGY_CLK_SEL	R/W	0	To select the energy accumulator CLK. It needs the stable time around 107μs when CLK switch over. Please disable CF before it is stable. 0: 204.8 KHz 1: 32.768 KHz
22	LCF_ACC	R/W	0	0: disable To write "0" into the bit31 of the DSP_CTRL0 the accumulating cycle of energy accumulator 3, 4, 5, 6, 7, and 8 is 20ms. To write "1" into the bit31 of the DSP_CTRL0, the accumulating cycle of energy accumulator 3, 4, 5, 6, 7, and 8 is 40ms. 1: enable To write "0" into the bit31 of the DSP_CTRL0, the accumulating cycle of energy accumulator 3, 4, and 5 is 10ms. Energy accumulator 6, 7, and 8 not accumulate. To write "1" into the bit31 of the DSP_CTRL0, the accumulating cycle of energy accumulator 3, 4, and 5 is 20ms. Energy accumulator 6, 7, and 8 not accumulate.
21	PGA_U	R/W	0	Voltage channel digital PGA: 0: X1 1: X4
20	PHSI_SEL	R/W	0	To select the input source for current zero-crossing. 0: current channel IA 1: current channel IB

0x03, R/W, Metering Control Register 2, DSP_CTRL1				
Bit		**R/W**	**Default Value**	**Description**
19:18	SIGN_SEL	R/W	0	To select the detect method of zero-crossing: 0: negative direction (it indicates the signal changing from positive to negative is occurring a zero-crossing event) 1: positive direction (it indicates the signal changing from negative to positive is occurring a zero-crossing event) 2: positive and negative direction 3: disable the zero-crossing detection function
17	AUTO_BAUD	R/W	0	Actively power accumulating data uploads, the upload interface can pass SYS_IOCFGX P0/ P1/ P2/ P3/ P4/ P5/ P6 pin configuration as the actively data uploads. Can use communicating methods to configure UART baud rate. 0: When UART communicates, baud rate is the same as last time serial communication. The baud rate when SPI communication is 4800. 1: When UART communicates, baud rate is as much again of last time serial communication. The baud rate when SPI communication is 9600.
16	AUTO_TX_EN	R/W	0	To enable the active power accumulating data uploads. 0: disable 1: enable
15	EGY_LC_EN	R/W	0	To enable the low-speed energy accumulator and CF counter. The accumulating speed of low-speed energy accumulator is 50 Hz. 0: disable 1: enable.
14	CF2_INV	R/W	0	To control the CF2 polarity. 0: original polarity 1: reverse polarity
13	CF2_EN	R/W	0	To Enable the CF2 output. 0: disable 1: enable.
12	CF2_SEL	R/W	0	To select the input source of CF2. 0: from the energy accumulator 1 1: from the energy accumulator 2

0x03, R/W, Metering Control Register 2, DSP_CTRL1				
Bit		**R/W**	**Default Value**	**Description**
11	Reserved		0	The bit must hold its default value for proper operation.
10	CF1_INV	R/W	0	To control CF1 polarity. 0: original polarity 1: reverse polarity
9	CF1_EN	R/W	0	To enable CF1 output. 0: disable CF1 output 1: enable CF1 output
8	CF1_SEL	R/W	0	To select the input source of CF1. 0: from the energy accumulator 1 1: from the energy accumulator 2
7	CALCEN2	R/W	0	To enable the energy accumulator 2 and CF2 counter. The accumulating speed of energy accumulator 2 is 204.8 KHz. 0: disable 1: enable.
6	CALCEN1	R/W	0	To enable the energy accumulator 1 and CF1 counter. The accumulating speed of energy accumulator 1 is 204.8 KHz. 0: disable 1: enable
5:4	CF_PULSE	R/W	0	To select the CF pulse width 0: 80 ms 1: 40 ms 2: 20 ms 3: 10 ms
3:2	CF_FAST_EN	R/W	0	CF pulse speed up output. 0: Normal mode 1: 4x faster 2: 8x faster 3: 16x faster
1	PWR_CRP_EN	R/W	0	To determine the power of power-creep. The power-creep determination uses continuous 3 average and threshold compare. If lower the threshold, then here will be the power-creep status. 0: disable the power-creep detection 1: enable the power-creep detection

0x03, R/W, Metering Control Register 2, DSP_CTRL1				
Bit		**R/W**	**Default Value**	**Description**
0	CRP_EN	R/W	0	To enable the High-speed energy accumulator. 0: disable the power-creep detection 1: enable the power-creep detection

29.3.4.3. DSP_CTRL2 Register

Table 29-21 Metering Control Register 2 (0x04, DSP_CTRL2)

0x04, R/W, Metering Control Register2, DSP_CTRL2				
Bit		**R/W**	**Default Value**	**Description**
31:30	INMODE4	R/W	0	The energy accumulator 4 accumulating mode. 0: power accumulation 1: current RMS accumulation 2: constant accumulation 3: configurable fundamental-wave channel accumulation
29	A_SEL4	R/W	0	To enable the energy accumulator 4, channel A accumulating. 0: disable 1: enable
28	B_SEL4	R/W	0	To enable the energy accumulator 4, channel B accumulating. 0: disable 1: enable
27:26	TYPE_SEL4	R/W	0	The energy accumulator 4, multiple channel accumulating mode choice. When power accumulating, 0, 3: active power accumulation 1: reactive power accumulation 2: apparent power accumulation When RMS accumulating, high bit zero represents accumulating sum; High bit one represents accumulating difference.

0x04, R/W, Metering Control Register2, DSP_CTRL2				
Bit		**R/W**	**Default Value**	**Description**
25:24	PROCMODE4	R/W	0	For each signal type choices which feed into the energy accumulator 4. 0: the positive value of the energy accumulator adding 1: the negative value of the energy accumulator adding (Here the actual accumulating value is the positive which exchanged from the original value.) 2: the original value of the energy accumulator adding 3: the absolute value of the energy accumulator adding
23:22	INMODE3	R/W	0	The energy accumulator 3 accumulation mode 0: power accumulation 1: current RMS accumulation 2: constant accumulation 3: configurable the fundamental wave channel accumulation
21	A_SEL3	R/W	0	To enable the energy accumulator 3, channel A accumulating. 0: disable; 1: enable
20	B_SEL3	R/W	0	To enable the energy accumulator 3, channel B accumulating. 0: disable 1: enable
19:18	TYPE_SEL3	R/W	0	The energy accumulator 3, multiple channel accumulating mode choice. When power accumulating, 0, 3: active power accumulation 1: reactive power accumulation 2: apparent power accumulation When RMS accumulating, High bit zero represents accumulating sum; high bit one represents accumulating difference.

0x04, R/W, Metering Control Register2, DSP_CTRL2				
Bit		**R/W**	**Default Value**	**Description**
17:16	PROCMODE3	R/W	0	For each signal type choices which feed into the energy accumulator 3. 0: the positive value of the energy accumulator adding 1: the negative value of the energy accumulator adding (Here the actual accumulating value is the positive which exchanged from the original value.) 2: the original value of the energy accumulator adding 3: the absolute value of the energy accumulator adding
15:14	INMODE2	R/W	0	The energy accumulator 2 accumulating mode. 0: power accumulation 1: current RMS accumulation 2: constant accumulation 3: configurable the fundamental wave channel accumulation
13	A_SEL2	R/W	0	To enable the energy accumulator 2, channel A accumulating. 0: disable 1: enable
12	B_SEL2	R/W	0	To enable the energy accumulator 2, channel B accumulating. 0: disable 1: enable
11:10	TYPE_SEL2	R/W		The energy accumulator 2, multiple channel accumulating mode choice. When power accumulating, 0, 3: active power accumulation 1: reactive power accumulation 2: apparent power accumulation When RMS accumulating, High bit zero represents accumulating sum; high bit one represents accumulating difference.

0x04, R/W, Metering Control Register2, DSP_CTRL2				
Bit		**R/W**	**Default Value**	**Description**
9:8	PROCMODE2	R/W	0	For each signal type choices which feed into the energy accumulator 2. 0: the positive value of the energy accumulator adding 1: the negative value of the energy accumulator adding (Here the actual accumulating value is the positive which exchanged from the original value.) 2: the original value of the energy accumulator adding 3: the absolute value of the energy accumulator adding
7:6	INMODE1	R/W	0	The energy accumulator 1 accumulating mode. 0: power accumulation 1: current RMS accumulation 2: constant accumulation 3: configurable the fundamental wave channel accumulation
5	A_SEL1	R/W	0	To enable the energy accumulator 1, channel A accumulating. 0: disable 1: enable
4	B_SEL1	R/W	0	To enable the energy accumulator 1, channel B accumulating. 0: disable 1: enable
3:2	TYPE_SEL1	R/W	0	Multiple channel accumulating mode choice. When power accumulating, 0, 3: active power accumulation 1: reactive power accumulation 2: apparent power accumulation When RMS accumulating, High bit zero represents accumulating sum; high bit one represents accumulating difference.

0x04, R/W, Metering Control Register2, DSP_CTRL2				
Bit		**R/W**	**Default Value**	**Description**
1:0	PROCMODE1	R/W	0	For each signal type choices which feed into the energy accumulator 1. 0: the positive value of the energy accumulator adding 1: the negative value of the energy accumulator adding (Here the actual accumulating value is the positive which exchanged from the original value.) 2: the original value of the energy accumulator adding 3: the absolute value of the energy accumulator adding

29.3.4.4. DSP_CTRL3 Register

Table 29-22 Metering Control Register 3 (0x05, DSP_CTRL3)

0x05, R/W, Metering Control Register 3, DSP_CTRL3				
Bit		**R/W**	**Default Value**	**Description**
31:30	INMODE8	R/W	0	The energy accumulator 8 accumulating mode. 0: power accumulation 1: current RMS accumulation 2: constant accumulation 3: configurable the fundamental wave channel accumulation
29	A_SEL8	R/W	0	To enable the energy accumulator 8, channel A accumulating. 0: disable 1: enable
28	B_SEL8	R/W	0	To enable the energy accumulator 8, channel B accumulating. 0: disable 1: enable

0x05, R/W, Metering Control Register 3, DSP_CTRL3				
Bit		**R/W**	**Default Value**	**Description**
27:26	TYPE_SEL8	R/W	0	The energy accumulator 8, multiple channel accumulating mode choice. When power accumulating, 0, 3: active power accumulation 1: reactive power accumulation 2: apparent power accumulation When RMS accumulating, High bit zero represents accumulating sum; high bit one represents accumulating difference.
25:24	PROCMODE8	R/W	0	For each signal type choices which feed into the energy accumulator 8. 0: the positive value of the energy accumulator adding 1: the negative value of the energy accumulator adding (Here the actual accumulating value is the positive which exchanged from the original value.) 2: the original value of the energy accumulator adding 3: the absolute value of the energy accumulator adding
23:22	INMODE7	R/W	0	The energy accumulator 7 accumulating mode 0: power accumulation 1: current RMS accumulation 2: constant accumulation 3: configurable the fundamental wave channel accumulation
21	A_SEL7	R/W	0	To enable the energy accumulator 7, channel A accumulating 0: disable 1: enable
20	B_SEL7	R/W	0	To enable the energy accumulator 7, channel B accumulating 0: disable 1: enable

0x05, R/W, Metering Control Register 3, DSP_CTRL3				
Bit		**R/W**	**Default Value**	**Description**
19:18	TYPE_SEL7	R/W	0	The energy accumulator 7, multiple channel accumulating mode choice. When power accumulating, 0, 3: active power accumulation 1: reactive power accumulation 2: apparent power accumulation When RMS accumulating, High bit zero represents accumulating sum; high bit one represents accumulating difference.
17:16	PROCMODE7	R/W	0	For each signal type choices which feed into the energy accumulator 7. 0: the positive value of the energy accumulator adding 1: the negative value of the energy accumulator adding (Here the actual accumulating value is the positive which exchanged from the original value.) 2: the original value of the energy accumulator adding 3: the absolute value of the energy accumulator adding
15:14	INMODE6	R/W	0	The energy accumulator 6 accumulating mode. 0: power accumulation 1: current RMS accumulation 2: constant accumulation 3: configurable the fundamental wave channel accumulation
13	A_SEL6	R/W	0	To enable the energy accumulator 6, channel A accumulating. 0: disable 1: enable
12	B_SEL6	R/W	0	To enable the energy accumulator 6, channel B accumulating. 0: disable 1: enable

0x05, R/W, Metering Control Register 3, DSP_CTRL3				
Bit		**R/W**	**Default Value**	**Description**
11:10	TYPE_SEL6	R/W		The energy accumulator 6, multiple channel accumulating mode choice. When power accumulating, 0, 3: active power accumulation 1: reactive power accumulation 2: apparent power accumulation When RMS accumulating, High bit zero represents accumulating sum; high bit one represents accumulating difference.
9:8	PROCMODE6	R/W	0	For each signal type choices which feed into the energy accumulator 6. 0: the positive value of the energy accumulator adding 1: the negative value of the energy accumulator adding (Here the actual accumulating value is the positive which exchanged from the original value.) 2: the original value of the energy accumulator adding 3: the absolute value of the energy accumulator adding
7:6	INMODE5	R/W	0	The energy accumulator 5 accumulating mode. 0: power accumulation 1: current RMS accumulation 2: constant accumulation 3: configurable the fundamental wave channel accumulation
5	A_SEL5	R/W	0	To enable the energy accumulator 5, channel A accumulating. 0: disable 1: enable
4	B_SEL5	R/W	0	To enable the energy accumulator 5, channel B accumulating. 0: disable 1: enable

0x05, R/W, Metering Control Register 3, DSP_CTRL3				
Bit		**R/W**	**Default Value**	**Description**
3:2	TYPE_SEL5	R/W	0	The energy accumulator 5, multiple channel accumulating mode choice. When power accumulating, 0, 3: active power accumulation 1: reactive power accumulation 2: apparent power accumulation When RMS accumulating, High bit zero represents accumulating sum; high bit one represents accumulating difference.
1:0	PROCMODE5	R/W	0	For each signal type choices which feed into the energy accumulator 5. 0: the positive value of the energy accumulator adding 1: the negative value of the energy accumulator adding (Here the actual accumulating value is the positive which exchanged from the original value.) 2: the original value of the energy accumulator adding 3: the absolute value of the energy accumulator adding

29.3.4.5. DSP_CTRL4 Register

Table 29-23 Metering Control Register 4 (0x06, DSP_CTRL4)

0x06, R/W, Metering Control Register 4, DSP_CTRL4				
Bit		**R/W**	**Default Value**	**Description**
31:30	IPERIOD	R/W	0	To select the detection time of over-current or under-current. When the number of sampling points of over-current or under-current in the sampling points during the half-cycle is greater than or equal to the ITH value, it will be considered as the effective half-cycle. If the number of consecutive effective half-cycle reaches the value set by IPERIOD, it will be considered as this event happened. 0: 1 half-cycle 1: 2 half-cycles 2: 4 half-cycles 3: 8 half-cycles

0x06, R/W, Metering Control Register 4, DSP_CTRL4				
Bit		**R/W**	**Default Value**	**Description**
29:24	ITH	R/W	0	To determine the threshold of half-cycle is effective half-cycle. 0: 1 time 1: 2 times … 63: 64 times
23:22	UPERIOD	R/W	0	The same as IPERIOD configurable conditions. 0: half cycle 1: 1 cycle 2: 2 cycles 3: 4 cycles
21:16	UTH	R/W	0	The same as ITH configurable conditions. 0: 1 time 1: 2 times … 63: 64 times
15:10	Reserved			These bits must hold its default value for proper operation.
9	IBLCSEL	R/W	0	IB under- current test source. 0: no pass IB wave data of high pass filter 1: pass IB wave data of high pass filter
8	IBOCSEL	R/W	0	IB: over-current test source. 0: no pass IB wave data of high pass filter 1: pass IB wave data of high pass filter
7	IALCSEL	R/W	0	IA under-current test source. 0: no pass IA wave data of high pass filter 1: pass IA wave data of high pass filter
6	IAOCSEL	R/W	0	IA over-current test source. 0: no pass IA wave data of high pass filter 1: pass IA wave data of high pass filter
5	ULVSEL	R/W	0	channel U under-voltage test source. 0: no pass channel U wave data of high pass filter 1: pass channel U wave data of high pass filter
4	UOVSEL	R/W	0	channel U over-voltage test source. 0: no pass channel U wave data of high pass filter 1: pass channel U wave data of high pass filter
3	Reserved		0	The bit must hold its default value for proper operation.

0x06, R/W, Metering Control Register 4, DSP_CTRL4				
Bit		**R/W**	**Default Value**	**Description**
2	FDIBEN	R/W	0	To enable the fast detection for IB. 0: disable IB over or under current test 1: enable IB over or under current test
1	FDIAEN	R/W	0	To enable the fast detection for IA. 0: disable IA over or under current test 1: enable IA over or under current test
0	FDUEN	R/W	0	To enable the fast detection. 0: disable channel U over or under voltage test 1: enable channel U over or under voltage test

29.3.4.6. DSP_CTRL5 Register

Table 29-24 Metering Control Register 5 (0x07, DSP_CTRL5)

0x07, R/W, Metering Control Register 5, DSP_CTRL5				
Bit		**R/W**	**Default Value**	**Description**
31	WAVE_ADDR_CLR	R/W	0	Reset reading the address of waveform storage, write 1 to reset.
30:29	WAVE_MEM_MODE	R/W	0	The operating mode of waveform storage: 0: storage by manual, full then stop. This time is the single storage. 1: storage by manual, trigger or manual stop. This time is the cyclic storage. 2: storage by trigger, full then stop. This time is the single storage. 3: disable
28	WAVE_MEM_EN	R/W	0	Waveform storage to trigger manual switch: write 1 = enable, write 0 = disable 0: disable 1: enable
27	U_DIP_TRIG	R/W	0	event trigger for the voltage dip. 0: disable 1: enable

0x07, R/W, Metering Control Register 5, DSP_CTRL5				
Bit		**R/W**	**Default Value**	**Description**
26	U_SWELL_TRIG	R/W	0	event trigger for the voltage swell. 0: disable 1: enable
25	IB_LC_TRIG	R/W	0	event trigger for the IB under-current. 0: disable 1: enable
24	IB_OC_TRIG	R/W	0	Event trigger for the IB over-current. 0: disable 1: enable
23	IA_LC_TRIG	R/W	0	Event trigger for the IA under-current. 0: disable 1: enable
22	IA_OC_TRIG	R/W	0	Event trigger for the IA over-current. 0: disable 1: enable
21	U_LV_TRIG	R/W	0	Event trigger for Under-voltage. 0: disable 1: enable
20	U_OV_TRIG	R/W	0	Event trigger for Over-voltage. 0: disable 1: enable
19:16	WAVE_LENGTH	R/W	0	To select output waveform length of DMA channel. 0: 1 cycle 1: 2 cycles 2: 3 cycles …… 15: 16 cycles
15	Reserved	-	-	The bit must hold its default value for proper operation.

0x07, R/W, Metering Control Register 5, DSP_CTRL5				
Bit		**R/W**	**Default Value**	**Description**
14	WAVE_U_HPF_SEL	R/W	0	Voltage waveform whether pass high-pass filter choice: 0: no pass high-pass filter 1: pass high-pass filter
13	WAVE_IA_HPF_SEL	R/W	0	Current IA waveform whether pass high-pass filter choice: 0: no pass high-pass filter 1: pass high-pass filter
12	WAVE_IB_HPF_SEL	R/W	0	Current IB waveform whether pass high-pass filter choice: 0: no pass high-pass filter 1: pass high-pass filter
11	Reserved	-	-	The bit must hold its default value for proper operation.
10	WAVE_U_SEL	R/W	0	To enable the waveform storage and DMA of channel U. The bit decides whether storage or transmit data of channel U: 0: no 1: yes
9	WAVE_IA_SEL	R/W	0	To Enable the waveform storage and DMA of channel IA. The bit decides whether storage or transmit data of channel IA: 0: no 1: yes
8	WAVE_IB_SEL	R/W	0	To enable the waveform storage and DMA of channel IB. The bit decides whether storage or transmit data of channel IB (If waveform storage and configure bit 8, bit 9, and bit 10 enable at the same time, the bit becomes invalid): 0: no 1: yes
7	SP_CHECK	R/W	0	DMA mode parity check choice: 0: odd parity 1: even parity

0x07, R/W, Metering Control Register 5, DSP_CTRL5				
Bit		**R/W**	**Default Value**	**Description**
6	SPI_POL	R/W	0	DMA mode polarity choice: 0: negative 1: positive
5	SPI_PHA	R/W	0	DMA mode phase choice: 0: negative 1: positive
4	DMA_MANUALOFF	R/W	0	DMA channel off by manual. 0: disable 1: enable
3	DMA_MANUALON	R/W	0	DMA channel on by manual. 0: disable 1: enable
2:0	DMA_MODE	R/W	0	DMA channel operating mode: 0: transmit starting by manual, until maximum cycle then stops. 1: transmit starting by manual, trigger or by manual stop. 2: trigger starting, stop by manual. 3: trigger starting, until maximum cycle then stops. 4~7: transmit by manual, stop by manual.

29.3.5. Metering Data Register

When power-on reset (POR), RSTN pin reset, RX reset, or global software reset occurs, all metering control registers will be reset to the default value.

29.3.5.1. DC Component Register

Table 29-25 DC Component Register

Address	Register	R/W	Data Format	Description	
0x22	DSP_DAT_DCU	R	32-bit Complement Code	DC value of voltage channel.	By default, the updating time is

Address	Register	R/W	Data Format	Description	
0x23	DSP_DAT_DCI	R	32-bit Complement Code	DC value of current channel A.	40ms; stable time is 120ms.
0x24	DSP_DAT_DCIB	R	32-bit Complement Code	DC value of Current channel B.	

29.3.5.2. RMS Register

Table 29-26 Voltage/ Current/ Measurement Signal (M) RMS Register

Address	Register	R/W	Data Format	Description	
0x0E	DSP_DAT_RMS0U	R	32-bit Complement Code	Instantaneous RMS of voltage.	By default, the updating time is 10ms; stable time is 30ms.
0x0F	DSP_DAT_RMS0IA	R	32-bit Complement Code	Instantaneous RMS of current A.	
0x10	DSP_DAT_RMS0IB	R	32-bit Complement Code	Instantaneous RMS of current B.	
0x19	DSP_DAT_RMS1U	R	32-bit Complement Code	Average RMS of voltage.	Under the default state, the updating time is 40ms; stable time is 120ms.
0x1A	DSP_DAT_RMS1IA	R	32-bit Complement Code	Average RMS of Current A.	
0x1B	DSP_DAT_RMS1IB	R	32-bit Complement Code	Average RMS of Current B.	
0x1E	DSP_DAT_RMSU_AVG	R	32-bit Complement Code	Average RMS of Voltage for 10 or 12 cycles (chose by line frequency.)	
0x1F	DSP_DAT_RMSIA_AVG	R	32-bit Complement Code	Average RMS of Current IA for 10 or 12 cycles (chose by line frequency.)	

Address	Register	R/W	Data Format	Description	
0x20	DSP_DAT_RMSIB_AVG	R	32-bit Complement Code	Average RMS of Current IB for 10 or 12 cycles (chose by line frequency.)	
0x68	TEMPERATE	R	32-bit Complement Code	Temperature	

29.3.5.3. Active/ Reactive Power Register

Table 29-27 Active/ Reactive Power Register

Address	Register	R/W	Data Format	Description	
0x08	DSP_DAT_PA	R	32-bit Complement Code	Instantaneous Active Power of channel A.	By default, the updating time is 20ms; stable time is 60ms.
0x09	DSP_DAT_QA	R	32-bit Complement Code	Instantaneous Reactive Power of channel A.	
0x0A	DSP_DAT_SA	R	32-bit Complement Code	Instantaneous Apparent Power of channel A.	
0x0B	DSP_DAT_PB	R	32-bit Complement Code	Instantaneous Active Power of channel B.	
0x0C	DSP_DAT_QB	R	32-bit Complement Code	Instantaneous Reactive Power of channel B.	
0x0D	DSP_DAT_SB	R	32-bit Complement Code	Instantaneous Apparent Power of channel B.	
0x13	DSP_DAT_PA1	R	32-bit Complement Code	Average Active power of Channel A.	By default, the updating time is 80ms; stable time is 240ms.
0x14	DSP_DAT_QA1	R	32-bit Complement Code	Average Reactive power of Channel A.	
0x15	DSP_DAT_SA1	R	32-bit Complement Code	Average Apparent Power of Channel A.	
0x16	DSP_DAT_PB1	R	32-bit Complement Code	Average Active power of Channel B.	
0x17	DSP_DAT_QB1	R	32-bit Complement Code	Average Reactive power of Channel B.	
0x18	DSP_DAT_SB1	R	32-bit Complement Code	Average Apparent Power of Channel B.	

29.3.5.4. Fundamental Wave Channel Register

Table 29-28 Fundamental Wave Channel Instantaneous Register

Address	Register	R/W	Data Format	Description
0x11	DSP_DAT_CH1	R	32-bit Complement Code	Instantaneous value of Fundamental wave of Channel 1.
0x12	DSP_DAT_CH2	R	32-bit Complement Code	Instantaneous value of Fundamental wave of Channel 2.

Table 29-29 Fundamental Wave Channel Average Register

Address	Register	R/W	Data Format	Description
0x1C	DSP_DAT_CH1_AVG	R	32-bit Complement Code	Average value of Fundamental wave of Channel 1.
0x1D	DSP_DAT_CH2_AVG	R	32-bit Complement Code	Average value of Fundamental wave of Channel 2.

29.3.5.5. Line Frequency Register

Table 29-30 Line Frequency Register (0x21, DSP_DAT_FRQ)

Address	Register	R/W	Data Format	Description
0x21	DSP_DAT_FRQ	R	32-bit Complement Code	Line frequency is related to FRQ_SEL. By default, the updating time is 320ms; stable time is 640ms.

29.3.6. Energy Accumulator Register

Table 29-31 Energy Accumulator Register

Address	Register	R/W	Data Format	Description
0x39	EGY_PROCTH	R	32-bit Unsigned	Anti-creep threshold for energy accumulator. When the accumulated value of the anti-creep energy accumulator over this threshold and the accumulated value of the high-speed energy accumulator under this threshold, the accumulated value of the high-speed energy accumulator will be cleared.

Address	Register	R/W	Data Format	Description
0x3A	EGY_PWRTH	R/W	32-bit Unsigned	Accumulation threshold for energy accumulator. Due to the energy accumulator was 46bit, the accumulated value of the high-speed energy accumulator equals to this value*16384; the accumulated value of the low-speed energy accumulator equals to this value*4.
0x3B	EGY_CONST1	R/W	32-bit Unsigned	Energy accumulator 1 accumulating constant.
0x3C	EGY_OUT1L	R/W	32-bit Unsigned	Energy accumulator 1 accumulating low bit.
0x3D	EGY_OUT1H	R/W	32-bit Unsigned	Energy accumulator 1 accumulating high bit Low 14bit effective.
0x3E	EGY_CFCNT1	R/W	32-bit Unsigned	Energy accumulator 1 pulse counter.
0x3F	EGY_CONST2	R	32-bit Unsigned	Energy accumulator 2 accumulating constant.
0x40	EGY_OUT2L	R/W	32-bit Unsigned	Energy accumulator 2 accumulating low bit.
0x41	EGY_OUT2H	R/W	32-bit Unsigned	Energy accumulator 2 accumulating high bit Low 14bit effective.
0x42	EGY_CFCNT2	R/W	32-bit Unsigned	Energy accumulator 2 pulse counter.
0x43	EGY_CONST3	R	32-bit Unsigned	Energy accumulator 3 accumulating constant.
0x44	EGY_OUT3	R/W	32-bit Unsigned	Energy accumulator 3 accumulating value.
0x45	EGY_CFCNT3	R/W	32-bit Unsigned	Energy accumulator 3 pulse counter.
0x46	EGY_CONST4	R	32-bit Unsigned	Energy accumulator 4 accumulating constant.
0x47	EGY_OUT4	R/W	32-bit Unsigned	Energy accumulator 4 accumulating value.
0x48	EGY_CFCNT4	R/W	32-bit Unsigned	Energy accumulator 4 pulse counter.
0x49	EGY_CONST5	R	32-bit Unsigned	Energy accumulator 5 accumulating constant.
0x4A	EGY_OUT5	R/W	32-bit Unsigned	Energy accumulator 5 accumulating value.
0x4B	EGY_CFCNT5	R/W	32-bit Unsigned	Energy accumulator 5 pulse counter.
0x4C	EGY_CONST6	R	32-bit Unsigned	Energy accumulator 6 accumulating constant.
0x4D	EGY_OUT6	R/W	32-bit Unsigned	Energy accumulator 6 accumulating value.
0x4E	EGY_CFCNT6	R/W	32-bit Unsigned	Energy accumulator 6 pulse counter.
0x4F	EGY_CONST7	R	32-bit Unsigned	Energy accumulator 7 accumulating constant.
0x50	EGY_OUT7	R/W	32-bit Unsigned	Energy accumulator 7 accumulating value.
0x51	EGY_CFCNT7	R/W	32-bit Unsigned	Energy accumulator 7 pulse counter.
0x52	EGY_CONST8	R	32-bit Unsigned	Energy accumulator 8 accumulating constant.
0x53	EGY_OUT8	R/W	32-bit Unsigned	Energy accumulator 8 accumulating value.

Address	Register	R/W	Data Format	Description
0x54	EGY_CFCNT8	R/W	32-bit Unsigned	Energy accumulator 8 pulse counter.

29.3.7. Phase Measurement Register

Table 29-32 Phase Measurement Register

Address	Register	R/W	Data Format	Description
0x61	DSP_PHS_STT	R/W	32-bit Unsigned	To control the phase measurement. Enable phase measurement once for writing operation.
0x62	DSP_PHS_U	R	32-bit Unsigned	Voltage Phase Value.
0x63	DSP_PHS_UN	R	32-bit Unsigned	The waveform data before voltage zero-crossing.
0x64	DSP_PHS_UP	R	32-bit Unsigned	The waveform data after voltage zero-crossing.
0x65	DSP_PHS_I	R	32-bit Unsigned	Current Phase Value.
0x66	DSP_PHS_IN	R	32-bit Unsigned	The waveform data before current zero-crossing.
0x67	DSP_PHS_IP	R	32-bit Unsigned	The waveform data after current zero-crossing.

29.3.8. Power-creep Threshold Register

Table 29-33 Power-creep Threshold Register

Address	Register	R/W	Data Format	Description
0x55	DSP_OV_THL	R/W	32-bit Complement Code	To set the lower threshold for the power creep detection for instantaneous active power/ reactive power/ apparent power of channel A and B.
0x56	DSP_OV_THH	R/W	32-bit Complement Code	To set the upper threshold for the power creep detection for instantaneous active power/ reactive power/ apparent power of channel A and B.

29.3.9. Voltage Swell or Dip Threshold Register

Table 29-34 Voltage Swell or Dip Threshold Register

Address	Register	R/W	Data Format	Description
0x57	DSP_SWELL_THL	R/W	32-bit Complement Code	To set the lower threshold for the voltage swell.
0x58	DSP_SWELL_THH	R/W	32-bit Complement Code	To set the upper threshold for the voltage swell.
0x59	DSP_DIP_THL	R/W	32-bit Complement Code	To set the lower threshold for the voltage dip.
0x5A	DSP_DIP_THH	R/W	32-bit Complement Code	To set the upper threshold for the voltage dip.
0x6A	DAT_SWELL_CNT	R/C	32-bit Complement Code	Times records of voltage swell, half wave as a unit. 24bit effective. When write in any value, can clear zero the counter value.
0x6B	DAT_DIP_CNT	R/C	32-bit Complement Code	Times records of voltage dip, half wave as a unit. 24bit effective. When write in any value, can clear zero the counter value.

29.3.10. Fast Detection Threshold Register

Table 29-35 Fast detection Threshold Register

Address	Register	R/W	Data Format	Description
0x5B	FD_OVTH	R/W	30-bit Complement Code	To set over-voltage threshold for fast detection. Bit width is 30bit.
0x5C	FD_LVTH	R/W	30-bit Complement Code	To set under-voltage threshold for fast detection. Bit width is 30bit.
0x5D	FD_IA_OCTH	R/W	30-bit Complement Code	To set over-current threshold in channel A for fast detection. Bit width is 30bit.
0x5E	FD_IA_LCTH	R/W	30-bit Complement Code	To set under-current threshold in channel A for fast detection. Bit width is 30bit.
0x5F	FD_IB_OCTH	R/W	30-bit Complement Code	To set over-current threshold in channel B for fast detection. Bit width is 30bit.

Address	Register	R/W	Data Format	Description
0x60	FD_IB_LCTH	R/W	30-bit Complement Code	To set under-current threshold in channel B for fast detection. Bit width is 30bit.

29.3.11. Waveform Data Register

Table 29-36 Waveform Data Register

Address	Register	R/W	Data Format	Description
0x69	DAT_WAVE	R	32-bit Complement Code	Waveform reading. It can repeatable reading the address and obtain the overall wave data. If there is no need to read all data, it would be reset the bit 31 of metering control register (0x07, DSP_CTRL5) to read address.

29.3.12. Calibration Register

When power-on reset (POR), RSTN pin reset, RX reset, or global software reset occurs, all calibration registers will be reset to the default value. The default value in the following tables of this section are in format of hexadecimal.

All the calibration registers need to be configuration verification and self-checking.

29.3.12.1. DC Bias Setting Register

Table 29-37 DC Bias Setting Register

Address	Register	Default Value	R/W	Format Value	Description
0x34	DSP_CFG_DCU	0	R/W	32-bit Complement Code	To set the DC compensation for the voltage channel.
0x35	DSP_CFG_DCIA	0	R/W	32-bit Complement Code	To set the DC compensation for the current channel A.
0x36	DSP_CFG_DCIB	0	R/W	32-bit Complement Code	To set the DC compensation for the current channel B.
All registers for calibration need to be configuration verification and self-checking.					

29.3.12.2. RMS Calibration Register

Table 29-38 Voltage/ Current/ Measurement RMS Calibration Register

Address	Register	Default Value	R/W	Data Format	Description
0x2D	DSP_CFG_CALI_RMSU	0	R/W	32-bit Complement Code	To set gain calibration for Voltage RMS.
0x2E	DSP_CFG_RMS_DCU	0	R/W	32-bit Complement Code	To set offset calibration for Voltage RMS.
0x2F	DSP_CFG_CALI_RMSIA	0	R/W	32-bit Complement Code	To set gain calibration for Current RMS A.
0x30	DSP_CFG_RMS_DCIA	0	R/W	32-bit Complement Code	To set offset calibration for Current RMS A.
0x31	DSP_CFG_CALI_RMSIB	0	R/W	32-bit Complement Code	To set gain calibration for Current RMS B.
0x32	DSP_CFG_RMS_DCIB	0	R/W	32-bit Complement Code	To set offset calibration for Current RMS.

29.3.12.3. Power Calibration Register

Table 29-39 Total-wave Active/ Reactive Power Calibration Register

Address	Register	Default Value	R/W	Data Format	Description
0x25	DSP_CFG_CALI_PA	0	R/W	32-bit Complement Code	To set gain calibration for the active power A.
0x26	DSP_CFG_DC_PA	0	R/W	32-bit Complement Code	To set offset calibration for the active power A.
0x27	DSP_CFG_CALI_QA	0	R/W	32-bit Complement Code	To set gain calibration for Reactive power A.
0x28	DSP_CFG_DC_QA	0	R/W	32-bit Complement Code	To set offset calibration for Reactive power A.
0x29	DSP_CFG_CALI_PB	0	R/W	32-bit Complement	To set gain calibration for Active power B.

				Code	
0x2A	DSP_CFG_DC_PB	0	R/W	32-bit Complement Code	To set offset calibration for Active power B.
0x2B	DSP_CFG_CALI_QB	0	R/W	32-bit Complement Code	To set gain calibration for Reactive power B.
0x2C	DSP_CFG_DC_QB	0	R/W	32-bit Complement Code	To set offset calibration for Reactive power B.

29.3.12.4. Threshold Register

Table 29-40 Threshold Register

Address	Register	Default Value	R/W	Data Format	Description
0x39	EGY_PROCTH	0	R/W	32-bit Complement Code	Energy accumulator anti-creep threshold. When anti-creep energy accumulator exceeds the EGY_CRPTH and high-speed energy accumulator not exceeds the EGY_PWRTH, the accumulating value of high-speed accumulator will be cleared. Metering chip has a power-creep energy accumulating register for energy accumulator 1 and 2 respectively, and they have the same accumulation speed. After enabling the power-creep detection in the energy accumulator, the input would be fixed to 1 in this power-creep energy accumulator. User should configure threshold for the power-creep detection register (EGY_CRPTH) and energy accumulating threshold register (EGY_PWRTH). If the accumulating value of power-creep energy accumulator register reaches the value of EGY_CRPTH first, the energy accumulating register will be cleared, and system enter the power-creep status. When the accumulating value of energy accumulating register reaches the value of EGY_PWRTH first, the power-creep

					energy register will be cleared, system starts to work and operates normally. The actual bit width of register EGY_CRPTH is 32bit. The register contents will be padded with 0s automatically in the 4 least significant bits when the power-creep calculated. It would be calculated after extended to 36 digits.
0x3A	EGY_PWRTH	0	R/W	32-bit Complement Code	Accumulation threshold for energy accumulator. Due to the energy accumulator was 46bit, the accumulated value of the high-speed energy accumulator equals to this value*16384; the accumulated value of the low-speed energy accumulator equals to this value*4.
0x55	DSP_OV_THL	0	R/W	32-bit Complement Code	To set the lower threshold for the power-creep determination.
0x56	DSP_OV_THH	0	R/W	32-bit Complement Code	To set the upper threshold for the power-creep determination.

29.3.12.5. Phase Calibration Register

Table 29-41 Phase Calibration Register (0x33, DSP_CFG_PHC)

Address	Register	Default Value	R/W	Data Format	Description
0x33	DSP_CFG_PHC	0	R/W	32-bit Complement Code	Phase Error Calibration Register. The register needs to be configuration verification and self-checking. [10:0]= phase error calibration value for channel A; [26:16]= phase error calibration value for channel B; Where the range is from -766 to 767.

29.3.12.6. Bandpass Filter Register

Table 29-42 Bandpass Filter Register (0x37, DSP_CFG_BPF)

Address	Register	Default Value	R/W	Data Format	Description
0x37	DSP_CFG_BPF	0	R/W	32-bit Complement Code	Band-pass filter coefficient. Related to setting the DSP_MODE by Bit[7:4] of metering control register 0 (0x02,DSP_CTRL0) Setting 0x806764B6 at DSP_MODE=0, 1, 2; setting 0x80DD7A8C at DSP_MODE=6,7; setting 0x82B465F0 at DSP_MODE=8. The frequency of other modes would be not supported to measure, so setting to 0x0.

29.3.13. Checksum Register

Table 29-43 Checksum Register (0x38, DSP_CFG_CKSUM)

Address	Register	Default Value	R/W	Data Format	Description
0x28	DSP_CFG_CKSUM	0	R/W	32-bit Complement Code	This register needs to participate in parameter configuration self-check. This register participates in parameter configuration self-check along with the addresses 0x0~0x7, 0x25~0x3A, 0x55~0x60. If all the above register values add up to 0xFFFFFFFF, the parameter configuration self-check passes. To ensure parameter configuration self-check successful, the register should write correct value (0xFFFFFFFF - the sum of the configuration values of other registers participating in the check).

Table 29-44 Self-checking Register

Name	Type	Address	Description	Default
ANA_CTRL0	R/W	0x00	Analog Control Register 0.	0x00000000
ANA_CTRL1	R/W	0X01	Analog Control Register 1.	0x00000000

DSP_CTRL0	R/W	0x02	Metering Control Register 0.	0x00000000
DSP_CTRL1	R/W	0x03	Metering Control Register 1.	0x00000000
DSP_CTRL2	R/W	0x04	Metering Control Register 2.	0x00000000
DSP_CTRL3	R/W	0x05	Metering Control Register 3.	0x00000000
DSP_CTRL4	R/W	0x06	Metering Control Register 4.	0x00000000
DSP_CTRL5	R/W	0x07	Metering Control Register 5.	0x00000000
DSP_CFG_CALI_PA	R/W	0x25	To set gain calibration for the active power A.	0x00000000
DSP_CFG_DC_PA	R/W	0x26	To set offset calibration for the active power A.	0x00000000
DSP_CFG_CALI_QA	R/W	0x27	To set gain calibration for Reactive power A.	0x00000000
DSP_CFG_DC_QA	R/W	0x28	To set offset calibration for Reactive power A.	0x00000000
DSP_CFG_CALI_PB	R/W	0x29	To set gain calibration for Active power B.	0x00000000
DSP_CFG_DC_PB	R/W	0x2A	To set offset calibration for Active power B.	0x00000000
DSP_CFG_CALI_QB	R/W	0x2B	To set gain calibration for Reactive power B.	0x00000000
DSP_CFG_DC_QB	R/W	0x2C	To set offset calibration for Reactive power B.	0x00000000
DSP_CFG_CALI_RMSU	R/W	0x2D	To set gain calibration for Voltage RMS.	0x00000000
DSP_CFG_RMS_DCU	R/W	0x2E	To set offset calibration for Voltage RMS.	0x00000000
DSP_CFG_CALI_RMSIA	R/W	0x2F	To set gain calibration for Current RMS A.	0x00000000
DSP_CFG_RMS_DCIA	R/W	0x30	To set offset calibration for Current RMS A.	0x00000000
DSP_CFG_CALI_RMSIB	R/W	0x31	To set gain calibration for Current RMS B.	0x00000000
DSP_CFG_RMS_DCIB	R/W	0x32	To set offset calibration for Current RMS.	0x00000000
DSP_CFG_PHC	R/W	0x33	Phase Error Calibration Registers. [10:0]= phase error calibration value for channel A [26:16]= phase error calibration value for channel B. Where the range is from -766 to 767.	0x0000000
DSP_CFG_DCU	R/W	0x34	To set the DC compensation for the voltage channel.	0x00000000
DSP_CFG_DCIA	R/W	0x35	To set the DC compensation for the current channel A.	0x00000000
DSP_CFG_DCIB	R/W	0x36	To set the DC compensation for the current channel B.	0x00000000
DSP_CFG_BPF	R/W	0x37	Band-pass filter coefficient. Related to setting the DSP_MODE by Bit[7:4] of metering control register 0 (0x02,DSP_CTRL0). Setting 0x806764B6 at DSP_MODE=0,1,2; setting 0x80DD7A8C at DSP_MODE=6,7; setting 0x82B465F0 at DSP_MODE=8. The frequency of other modes would be not supported to measure, so setting to 0x0.	0x00000000
DSP_CFG_CKSUM	R/W	0x38	Configuration register for checksum.	0x00000000
EGY_PROCTH	R/W	0x39	Anti-creep threshold for energy	0x00000000

			accumulator. When the accumulated value of the anti-creep energy accumulator over this threshold and the accumulated value of the high-speed energy accumulator under this threshold, the accumulated value of the high-speed energy accumulator will be cleared.	
EGY_PWRTH	R/W	0x3A	Accumulation threshold for energy accumulator. Due to the energy accumulator was 46bit, the accumulated value of the high-speed energy accumulator equals to this value*16384; the accumulated value of the low-speed energy accumulator equals to this value*4.	0x00000000
DSP_OV_THL	R/W	0x55	To set the lower threshold for the no-load determination.	0x00000000
DSP_OV_THH	R/W	0x56	To set the upper threshold for the no-load determination.	0x00000000
DSP_SWELL_THL	R/W	0x57	To set the lower threshold for the voltage dip.	0x00000000
DSP_SWELL_THH	R/W	0x58	To set the upper threshold for the voltage swell.	0x00000000
DSP_DIP_THL	R/W	0x59	To set the lower threshold for the voltage dip.	0x00000000
DSP_DIP_THH	R/W	0x5A	To set the upper threshold for the voltage swell.	0x00000000
FD_OVTH	R/W	0x5B	To set over-voltage threshold for fast detection. Bit width is 30bit.	0x00000000
FD_LVTH	R/W	0x5C	To set under-voltage threshold for fast detection. Bit width is 30bit.	0x00000000
FD_IA_OCTH	R/W	0x5D	To set over-current threshold in channel A for fast detection. Bit width is 30bit.	0x00000000
FD_IA_LCTH	R/W	0x5E	To set under-current threshold in channel A for fast detection. Bit width is 30bit.	0x00000000
FD_IB_OCTH	R/W	0x5F	To set over-current threshold in channel B for fast detection. Bit width is 30bit.	0x00000000
FD_IB_LCTH	R/W	0x60	To set under-current threshold in channel B for fast detection. Bit width is 30bit.	0x00000000

29.4. DSP

29.4.1. Overview

Metering DSP are mainly used in calculating total-wave active power, fundamental-wave active power, total/ fundamental-wave reactive power, total-wave apparent power, total-wave RMS and fundamental-wave RMS; also provides power grid events to detect and waveform storage functions.

The energy accumulator can flexible configuration, providing 2 high-speed energy accumulators and 6 low-speed energy accumulators.

Waveform data can output to external by DMA or internal storage.

29.4.2. Features

--Support 1 voltage channel and 2 current channels metering at the same time

--Selectable the full-wave bandwidth

--Provide 2 configurable fundamental-wave channels which can calculate power and RMS of fundamental-wave.

--Selectable refresh time for average power value or average RMS.

--Provide the average RMS of 10 or 12 cycles which used in voltage flicker detection.

--Support to determine the power-creep, voltage swell or dip, over or under- voltage and over or under- current.

29.4.3. Functional Diagram

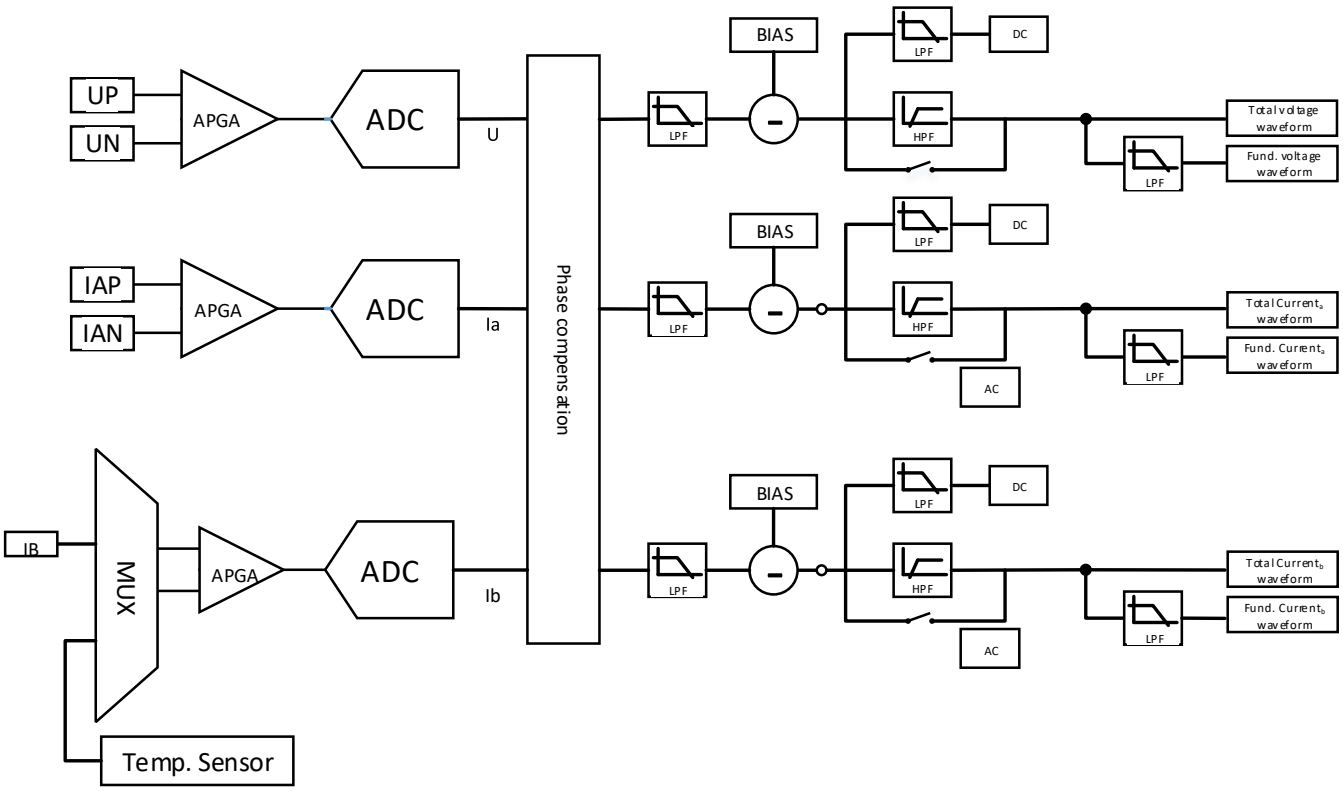

Figure 29-2 Functional Diagram1 of Metering DSP

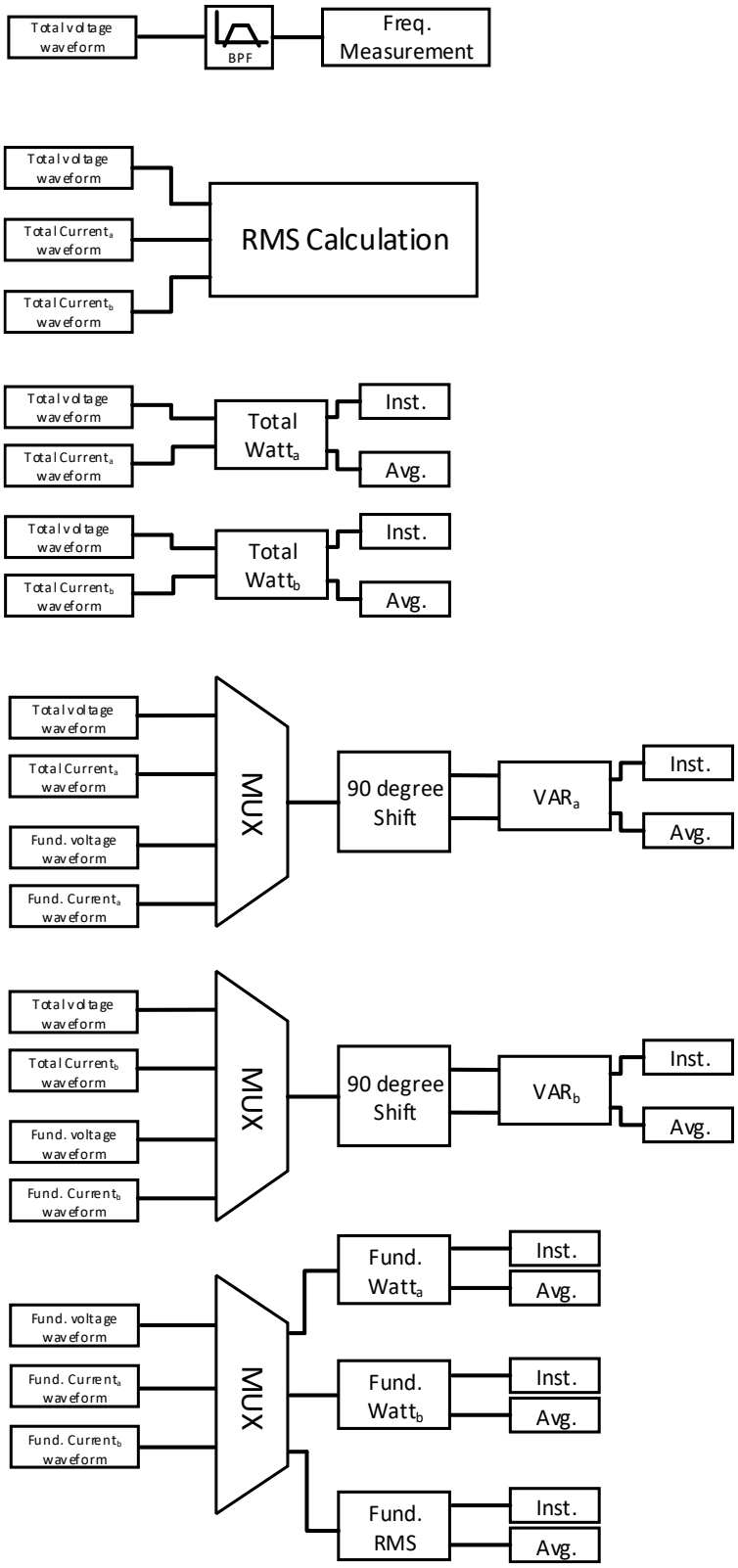

Figure 29-3 Functional Diagram2 of Metering DSP

29.4.4. Application Description

29.4.4.1. Phase Calibration

Table 29-45 Phase Calibration Description

DSP_MODE	calibration accuracy(degree)	Calibration range(degree)
0x00, 0x01, 0x02	0.005493164	±4.21875
0x06, 0x07	0.010986328	±8.4375
0x08	0.021972656	±16.855

Phase correction of IA phc_ia = Angle to be corrected /calibration_acuracy

Phase correction of IB phc_ib = Angle to be corrected /calibration_acuracy

IA and IB error correction values are combined in complement form and written into the error correction register (0x33, DSP_CFG_PHC).

29.4.4.2. Frequency Calculation

V94XX supports frequency measurement, which is stored in the grid frequency register (0x21, DSP_DAT_FRQ). Users need to configure the bandpass filter coefficient according to different DSP_MODE (Table 29-19 Metering Control Register 0 (0x02, DSP_CTRL0)). For details, please refer to the bandpass filter coefficient register (Table 29-42 Bandpass Filter Register (0x37, DSP_CFG_BPF)).

The user accumulates the number of cycles and the DSP_MODE configuration frequency constant through the FRQ_SEL configuration frequency test of the metering control register 0 (0x02, DSP_CTRL0).

Grid frequency = wave_cnt*freq_const/DSP_DAT_FRQ

Table 29-46 Frequency register source FRQ_SEL description

RQ_SEL	wave_cnt
0	16
1	1
2	64

Table 29-47 Frequency Constant Description

DSP_MODE	Frequency constant
0x08	1600
0x06, 0x07	3200
0x00, 0x01, 0x02	6400

29.4.4.3. Phase Test

Metering chip supports voltage phase and current phase measurement. The operation principle is, master MCU sends command to register DSP_PHS_STT (0x5f) and sets to 1 via UART/SPI interface. After the metering chip is decoded as a phase measurement command, it starts to use the 6.4 KHz for sampling frequency (When DSP_MODE is 0, 1, 2, the sampling frequency of voltage signal used for phase testing is 6.4 KHz. When DSP_MODE is 6 and 7, the sampling frequency of voltage signal used for phase testing is 3.2 KHz) to counting. Until positive zero-crossing events happened, it stops counting. This counting value will write into the voltage phase register DSP_PHS_U (0x62) and current phase register DSP_PHS_I (0x65). It also records two voltage sampling values before and after the positive zero-crossing DSP_PHS_UN (0x63), DSP_PHS_UP (0x64) and two current sampling values before and after the zero-crossing DSP_PHS_IN (0x66), DSP_PHS_IP (0x67). User can obtain better accurate phase value by interpolation method.

29.4.4.4. Power-creep Detection

Active power, reactive power, and apparent power support the power-creep function. See Table 29-33 Power-creep Threshold Register. When the instantaneous active power/reactive power/apparent power of the channel A and the channel B are higher than the upper threshold, the startup state is entered. When the instantaneous active power/reactive power/apparent power of the channel A and the channel B are lower than the upper threshold, the power-creep state is entered.

The user can check whether the instantaneous active power/reactive power/apparent power is in the power-creep state by Bit17~Bit12 of the SYS_STS system status register description (0x74, SYS_STS).

29.5. Active Waveform upload and buffer

V94XX waveform data can be transferred through DMA, or stored locally through waveform buffer. Trigger mode supports command trigger and event trigger.

29.5.1. Active Waveform upload

29.5.1.1. Overview

The V94XX supports the DMA mode for data transmission and sends up to 3 original waveform data to the external MCU through the SPI interface host mode. The user can set the active waveform upload through the metering control register 5 (0x07, DSP_CTRL5), and configure the active waveform data upload IO port P0~P6 through IO configuration register 0 (0x7D, SYS_IOCFG0) and IO configuration register 1 (0x7E, SYS_IOCFG1).

The number of sampling points per cycle of the DMA transmission data is related to DSP_MODE (Bit[7:4]) of DSP_CTRL0 (Table 29-19 Metering Control Register 0 (0x02, DSP_CTRL0)); the number of channels is related to Bit10~8 of DSP_CTRL5 (0x07, DSP_CTRL5). Its relationship is shown in the following table:

Table 29-48 Active waveform data upload configuration

The number of waveform transmission	Sampling points (related to DSP_MODE)	Baud Rate
1	256	819.2 KHz
3	128	819.2 KHz
2	128	819.2 KHz
1	128	409.6 KHz
3	64	409.6 KHz
2	64	409.6 KHz
1	64	204.8 KHz
1、2、3	32	204.8 KHz

29.5.1.2. Timing and Format

The V94XX transmits the original waveform of the signal to the peripheral device via the DMA SPI interface. The SPI polarity and phase are configurable. When the polarity is 0 and the phase is 0, the transmission timing is as follows:

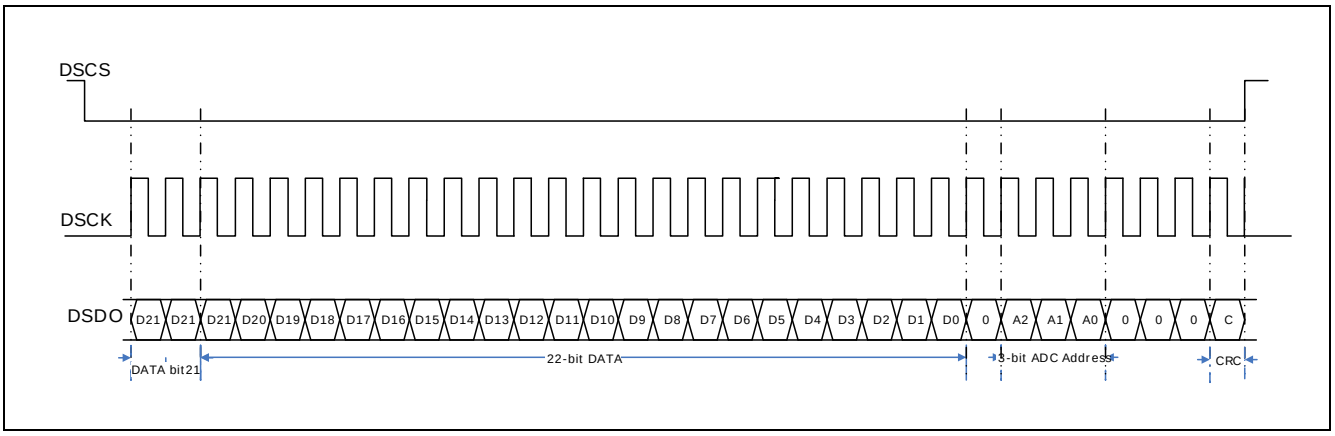

Figure 29-4 Communication timing of DMA SPI

Transmission mode: The transmission of 32-bit data is completed at one time. The format of the data frame for each transmission is as follows:

Table 29-49 Active waveform data upload format

Bit	Contents
31:30	Same as Bit29.
29:8	The original waveform of 22-bit for each channel ADC signal source.
7	0
6	Indicates whether the present waveform data is from a voltage channel. 0: no 1: yes
5	Indicates whether the present waveform data is from a channel IA. 0: no 1: yes
4	Indicates whether the present waveform data is from a channel IB 0: no 1: yes
3:1	000
0	Odd parity bit. The check range is the forward 31bit.

29.5.2. Waveform Buffer

After the waveform buffer function is enabled, the waveform data is stored in the RAM, supporting single-channel waveform data storage and dual-channel waveform data simultaneous storage mode. If the waveform buffer of three channels is enabled at the same time, the channel IB is invalid. The user can configure the waveform buffer and start and end condition selection by metering control register 5 (0x07, DSP_CTRL5). After the waveform buffer configuration is completed, the user can check whether the waveform buffer is completed by the WAVE_STORE of the system interrupt status register (0x72, SYS_INTSTS). After completion, the user can obtain waveform buffer data by repeatedly reading the waveform data register (0x69, DAT_WAVE), and it can read up to 309 data every time.

Table 29-50 waveform buffer data format

channel	High 16Bit	Low 16Bit
IA	$IADATA_{2n+1}$	$IADATA_{2n}$
IB	$IBDATA_{2n+1}$	$IBDATA_{2n}$
U	$UDATA_{2n+1}$	$UDATA_{2n}$
IA+IB	$IBDATA_n$	$IADATA_n$
IA+U	$IADATA_n$	$UDATA_n$
IB+U	$IBDATA_n$	$UDATA_n$
IA+IB+U (the channel IB is invalid at this time)	$IADATA_n$	$UDATA_n$

Where the range of n is 0~308

29.6. Electrical Signal monitoring

29.6.1. Zero-crossing Detection

The V94XX supports zero-crossing detection for voltage channel and current channel (the zero-crossing channel can be selected as the channel IA or channel IB by Bit20 of Metering Control Register 1 (Table 29-20 Metering Control Register 2 (0x03, DSP_CTRL1)). The zero-crossing direction can be selected by Bit19~Bit18 of the metering control register 1 (0x03, DSP_CTRL1). When the voltage/current channel signal has a zero-crossing event, the voltage zero-crossing flag USIGN/current zero-crossing flag ISIGN of the system interrupt status register (0x72, SYS_INTSTS) is set to 1. The user needs to write 1 to clear.

When the voltage/current zero-crossing interrupt output is enabled, USIGN/ISIGN of the system interrupt enable register (0x73, SYS_INTEN) is set to 1. To configure the voltage/current zero-crossing interrupt output by configuring IO Configuration Register 0 (0x7D, SYS_IOCFG0) or IO Configuration Register 1 (0x7E, SYS_IOCFG1). The output level of pin Px is automatically inverted according to the voltage zero-crossing flag USIGN/current zero-crossing flag ISIGN.

To configure the voltage/current zero-crossing interrupt output square wave by configuring IO Configuration Register 0 (0x7D, SYS_IOCFG0) or IO Configuration Register 1 (0x7E, SYS_IOCFG1).The output level of pin Px is automatically inverted according to the voltage/current zero-crossing status in real time. Each time a zero-crossing event occurs, the IO port is inverted once.

The following figure is configured to enable the zero-crossing interrupt output. When the zero-crossing detection mode is selected as the negative zero-crossing point, the USIGN/ISIGN flag bit, the zero-crossing interrupt output, and the zero-crossing output square wave waveform.

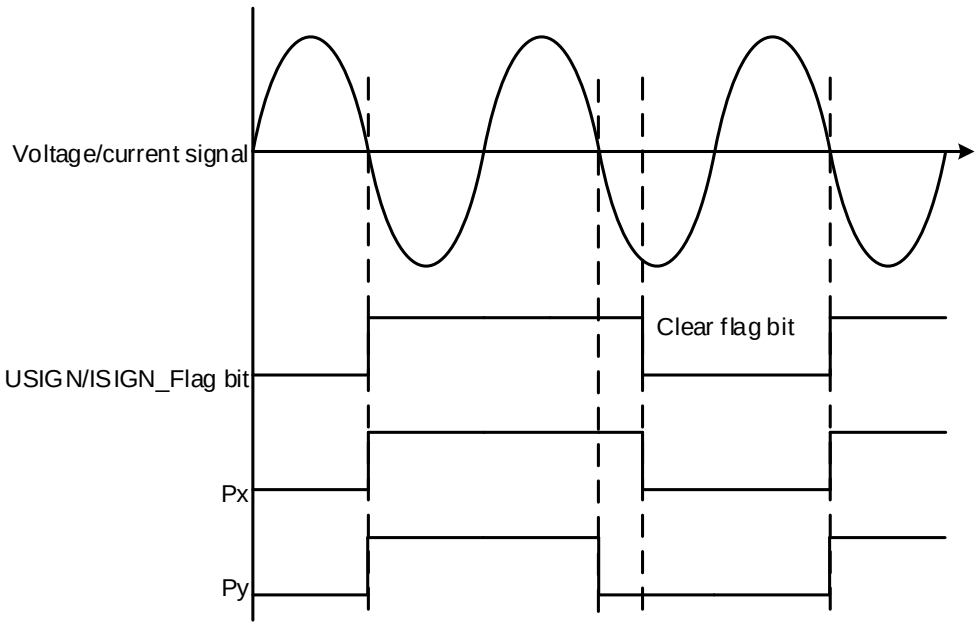

Figure 29-5 output waveform for voltage/current zero-crossing

29.6.2. Voltage Swell/Dip

The V94XX can be programmed to indicate voltage swell/dip. See Table 29-34 Voltage Swell or Dip Threshold Register.

When the voltage RMS value is above the upper limit of the voltage swell threshold, the voltage swell status bit (USWELL of the SYS_STS system status register (0x74, SYS_STS)) is set to 1. At the same time, the voltage swell flag (USWELL of the system interrupt status register (0x72, SYS_INTSTS)) is set to 1, and the flag bit is written to 1 to clear.

When the voltage RMS value is lower than the lower limit of the voltage swell threshold, the voltage swell status bit (USWELL of the SYS_STS system status register description (0x74, SYS_STS)) is restored to 0.

When the voltage RMS value is below the lower limit of the voltage dip threshold, the voltage dip status bit (UDIP of the SYS_STS system status register (0x74, SYS_STS)) is set to 1. At the same time, the voltage dip flag (UDIP of the system interrupt status register (0x72, SYS_INTSTS)) is set to 1, and the flag bit is written to 1 to clear.

When the voltage RMS value is lower than the lower limit of the voltage dip threshold, the voltage dip status bit (UDIP of the SYS_STS system status register description (0x74, SYS_STS)) is restored to 0.

At the same time, the voltage swell/sag time record can be obtained by reading the register DAT_SWELL_CNT/DAT_DIP_CNT, and the half wave is in units. 24Bit is valid. Write any value to this register to clear the count value.

The voltage swell interrupt flag and voltage dip interrupt flag can be configured by configuring the IO port output. See Table 29-15 IO Configuration Register 0 (0x7D, SYS_IOCFGX0) and Table 29-17 IO Configuration Register 1 (0x7E, SYS_IOCFGX1).

29.6.3. Over-voltage and under-voltage/Over-current and under-current

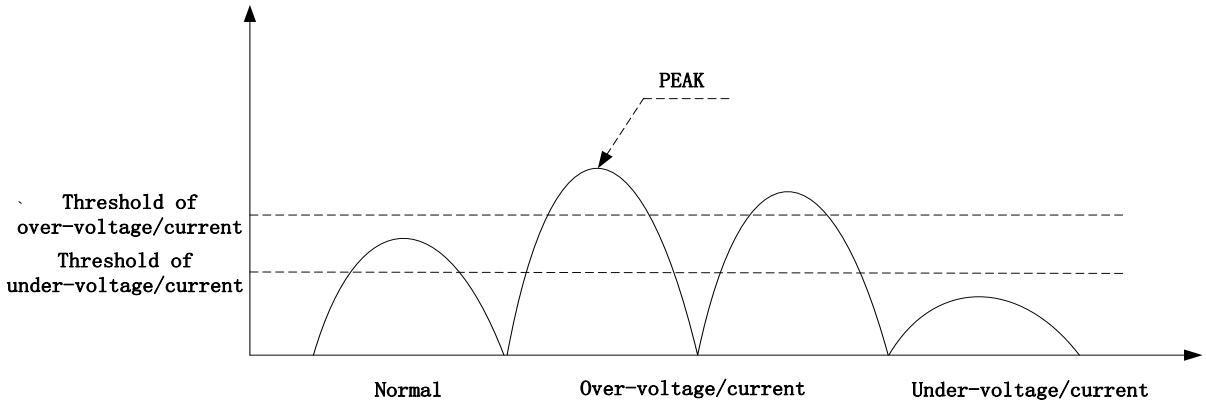

Figure 29-6 Over-voltage and under-voltage/Over-current and under-current detect

The V94XX can be programmed to indicate over-voltage/under-voltage of channel U, over-voltage/under-voltage of channel IA, and over-voltage/under-voltage of channel IB. See Table 29-35 Fast detection

Threshold Register. The user can enable the detection for over-voltage/under-voltage of channel U, over-current/under-current of channel IA, and over-current/under-current of channel IB by FDUEN, FDIAEN, and FFIBEN of metering control register 4 (Table 29-23 Metering Control Register 4 (0x06, DSP_CTRL4)). The detection source supports high-pass filters and by-pass. The over-voltage or under-voltage/over-current or under-current detection time length is selectable.

1) Support waveform monitoring of three ADCs.

2) Each ADC waveform monitor has two thresholds: upper threshold (over-voltage, over-current); lower threshold (under-voltage, under-current)

3) Exceeding the upper limit threshold sample points: For example, if the set value is 4, it means that if more than 4 of the half cycle sampling points exceed the upper limit threshold, the half cycle waveform is considered to exceed the upper limit.

4) Exceeding the upper threshold half-cycle number: For example, if the set value is 2, it means that if two consecutive half-cycles are exceeding the upper limit, an over-voltage or over-current event is considered to occur.

5) Below the lower limit threshold sample points: For example, if the set value is 4, it means that if low than or equal to 4 of the half cycle sampling points exceed the low limit threshold, the half cycle waveform is considered to below the lower limit.

6) below the lower threshold half-cycle number: For example, if the set value is 2, it means that if two consecutive half-cycles are below the lower limit, an over-voltage or over-current event is considered to occur.

7) When the event occurs, the flag bit is generated. The user can check the system status bit (SYS_STS system status register (0x74, SYS_STS)) and the flag bit (system interrupt status register (0x72, SYS_INTSTS)).

8) The corresponding event flag can be configured by interrupt enable and IO port output.

9) Response time: When the half-wave number is set to 1 and enabled or disabled the high-pass filter, the response time is 10ms, that is, when the input signal exceeds the threshold, the event interrupt can be output after a half cycle.

29.7. Energy Accumulator

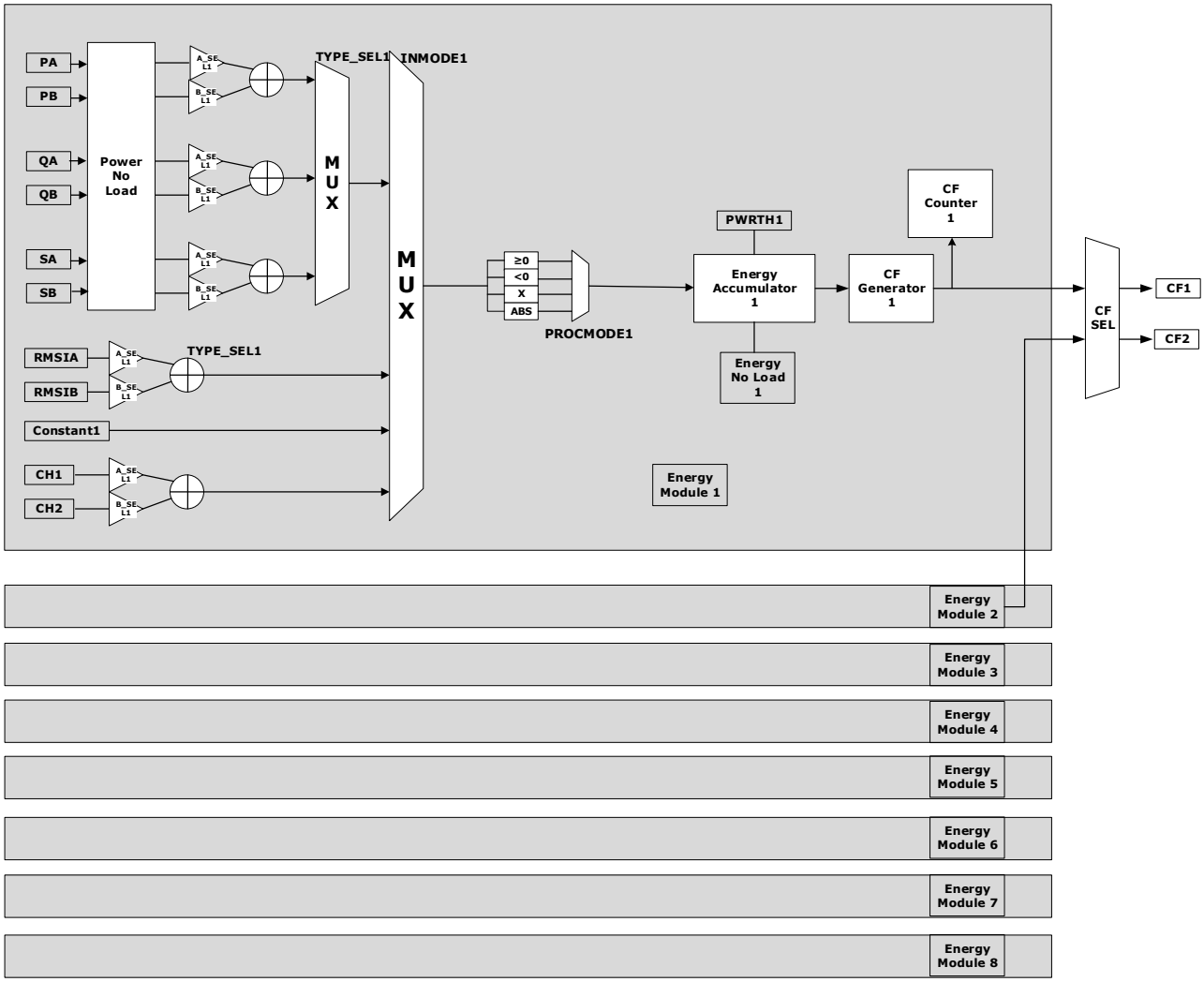

Figure 29-7 Functional block diagram of energy bucket

The V94XX has eight energy accumulators, including two high-speed energy accumulators and six low-speed energy accumulators. Each energy accumulators have four accumulation modes: power accumulation, current RMS accumulation, constant accumulation, and configurable fundamental channel accumulation.

The power accumulation is enabled by the channel an accumulation (A_SEL) and the channel B accumulation (B_SEL), which can realize only accumulating channel A power, only accumulating channel B power, and accumulating A and B power. Power can be selected for active power, reactive power and apparent power by TYPE_SEL.

The current accumulation is enabled by the channel An accumulation (A_SEL) and the channel B accumulation (B_SEL), which can realize only accumulating channel IA RMS, only accumulating channel IB RMS, and accumulating IA and IB RMS. Accumulating two-channel IA and IB RMS value can be selected by TYPE_SEL to accumulate the summation or accumulation difference of two channels (RMSIA+RMSIB or RMSIA-RMSIB).

The constant accumulation is not affected by enabling the A/B channel accumulation.

The power accumulation is enabled by the channel an accumulation (A_SEL) and the channel B accumulation (B_SEL), which can realize only accumulating channel A power, only accumulating channel B power, and accumulating A and B power. Power can be selected for active power, reactive power and apparent power by TYPE_SEL.

Configurable fundamental channel accumulation, enabled by A channel accumulation (A_SEL) and B channel accumulation switch, which can realize only accumulating fundamental channel 1 data, accumulating only fundamental channel 2 data, accumulating fundamental channel 1 plus accumulating fundamental channel 2.

There are four types of data operation that are accumulated for each input energy accumulator. Taking the active power of two channels as an example, the operation method is as follows.

0: The energy accumulator only accumulates positive numbers. Only accumulate data with PA+PB>0. If PA+PB<0, do not accumulate.

1: The energy accumulator only accumulates negative numbers (in this case, the actual accumulated value is a positive value of the original value conversion). Only data with PA+PB<0 (abs (PA+PB)) is added. If PA+PB>0, do not accumulate.

2: The energy accumulator accumulates the original value. Accumulate PA+PB.

3: The energy accumulator accumulates the absolute value. Accumulate abs (PA+PB)

29.7.1. High-speed Energy Accumulator

To enable high-speed energy accumulator 1, it needs to configure CALCEN1 (Bit[6]) in DSP_CTRL1 (Table 29-20 Metering Control Register 2 (0x03, DSP_CTRL1)). To enable high-speed energy accumulator 2, it needs to configure CALCEN2 (Bit[7]) in DSP_CTRL1. The default accumulative acceleration of the high-speed energy accumulator is 204.8 KHz, and 32768 Hz can also be selected by the energy accumulator clock (bit23 in DSP_CTRL1).

High-speed energy accumulator supports CF output.

29.7.2. Low-speed Energy Accumulator

The six low-speed energy accumulators are enabled by DGY_LC_EN (Bit[15]) in DSP_CTRL1 (Table 29-20 Metering Control Register 2 (0x03, DSP_CTRL1)). The default accumulated acceleration is 50Hz.

The accumulation speed of low-speed energy accumulator is controlled by CURDAT_RATE (Bit[31]) in DSP_CTRL0 (Table 29-19 Metering Control Register 0 (0x02, DSP_CTRL0)) and LCF_ACC (Bit[22]) in DSP_CTRL1.

When CURDAT_RATE=0:

LCF_ACC=0, the accumulation period of the energy buckets 3, 4, 5, 6, 7, 8 is 20 ms;

LCF_ACC=1, the accumulation period of the energy buckets 3, 4, and 5 is 10 ms, and the energy buckets 6, 7, and 8 are not accumulated.

- When CURDAT_RATE=0:

LCF_ACC=0, the accumulation period of the energy accumulators 3, 4, 5, 6, 7, 8 is 20ms;

LCF_ACC=1, the accumulation period of the energy accumulators 3, 4, and 5 is 10ms, and the energy accumulators 6, 7, and 8 are not accumulated.

- When CURDAT_RATE=1:

LCF_ACC=0, the accumulation period of the energy accumulators 3, 4, 5, 6, 7, 8 is 40ms;

LCF_ACC=1, the accumulation period of the energy accumulators 3, 4, and 5 is 20ms, and the energy accumulators 6, 7, and 8 are not accumulated.

29.7.3. CF Output

V94XX supports 2 channels of CF. The CF output is configured by the Meter Control Register 1 (Table 29-20 Metering Control Register 2 (0x03, DSP_CTRL1)) to select the IO port output.

CF supports source selection. It can be selected from the energy accumulator 1 or the energy accumulator 2.

CF supports polarity selection, pulse width selection, and accelerated weak-signal calibration.

Refer to the description of CF in Metering Control Register 1 (0x03, DSP_CTRL1) for details.

29.7.4. Energy Accumulator Power-creep Detection

Energy accumulator anti-creep threshold. When anti-creep energy accumulator exceeds the EGY_CRPTH and high-speed energy accumulator not exceeds the EGY_PWRTH, the accumulating value of high-speed accumulator will be cleared.

There is a power-creep energy accumulating register for energy accumulator 1 and 2, which they have the same accumulation speed.

User should configure threshold for the power-creep threshold register (EGY_CRPTH) and energy accumulating threshold register (EGY_PWRTH). If the accumulating value of power-creep energy accumulator register reaches the value of EGY_CRPTH first, the energy accumulating register will be cleared, and system enter the power-creep status. When the accumulating value of energy accumulating register reaches the value of EGY_PWRTH, the power-creep energy register will be cleared, system start to work and operating normally.

The actual bit width of register EGY_CRPTH is 32bit. The register contents will be padded with 0s automatically in the 4 least significant bits when the power-creep calculated. It would be calculated after extended to 36 digits.

User can judge whether in power-creep status through SYS_STS (BIT19, BIT18) .

29.7.5. Active Accumulation uploading Interface

Active data uploading interface can configure pins, P0/P1/P2/P3/P4/P5/P6, to be the active data interface through SYS_IOCFGX.

1. Asynchronous transfer mode by 1 data wire.

2. Interface configuration: 11-bit transmission (start bit + 8 data bit + parity bit + stop bit)

Communication baud rate: SPI communication data rate is 4800, it also can operate at 9600. UART communication data rate is same as present baud rate, also double the present baud rate.

To enable the function of double baud rate if BIT17 setting to 1 at the metering control register 1 (Table 29-20 Metering Control Register 2 (0x03, DSP_CTRL1)).

3. Communication time interval: 20ms/40ms (the same to instantaneous power refresh time)

4. Frame header: 0x7D

5. Checksum: the energy accumulator 1 accumulating data plus the energy accumulator 2 accumulating data. Total accumulate 8 bytes and reverse them, then plus 0x33 to obtain the checksum.

6. Frame length: 10 bytes

7. To enable this block by BIT 16 of metering control register 1 (DSP_CTRL1).

Protocol format as below:

frame header	the energy accumulator 1 accumulating data	the energy accumulator 2 accumulating data	checksum
0x7D	4 bytes	4 bytes	1 byte

29.8. Signal IO Ports

29.8.1. Overview

The V94XX provides up to seven signal outputs, and seven output signals are used to map the internal output sources.

29.8.2. Functional Description

The seven signal output ports can be configured as CF output, energy upload interface, waveform active upload DMA channel interface, zero-crossing square wave and four types of interrupt output. The signal output port can be set to output a single signal, or it can be set to output certain types of interrupt signals. See Table 29-15 IO Configuration Register 0 (0x7D, SYS_IOCFGX0) and Table 29-17 IO Configuration Register 1 (0x7E, SYS_IOCFGX1) for details.

1st type interruption: current zero-crossing interruption, voltage zero-crossing interruption

2nd type interruption: waveform refreshes interruption, instantaneous RMS refresh interruption, average RMS refreshes interruption, instantaneous power value refresh interruption, average power value refreshes interruption, waveform storage finish interruption, waveform storage overflow interruption and waveform data upload finished interruption.

3rd type interruption: IB channel under-current interruption, IB channel over-current interruption, IA channel under-current interruption, IA channel over-current interruption, voltage channel under-

voltage interruption, voltage channel over-voltage interruption, voltage dip interruption and voltage swell interruption.

4th type interruption: SPI communicating error interruption, UART communicating error interruption, parameters self-checking error interruption, phase measurement finished interruption, power-down interruption, reference error interruption, CTI external input clock error interruption and RAM self-checking error interruption.

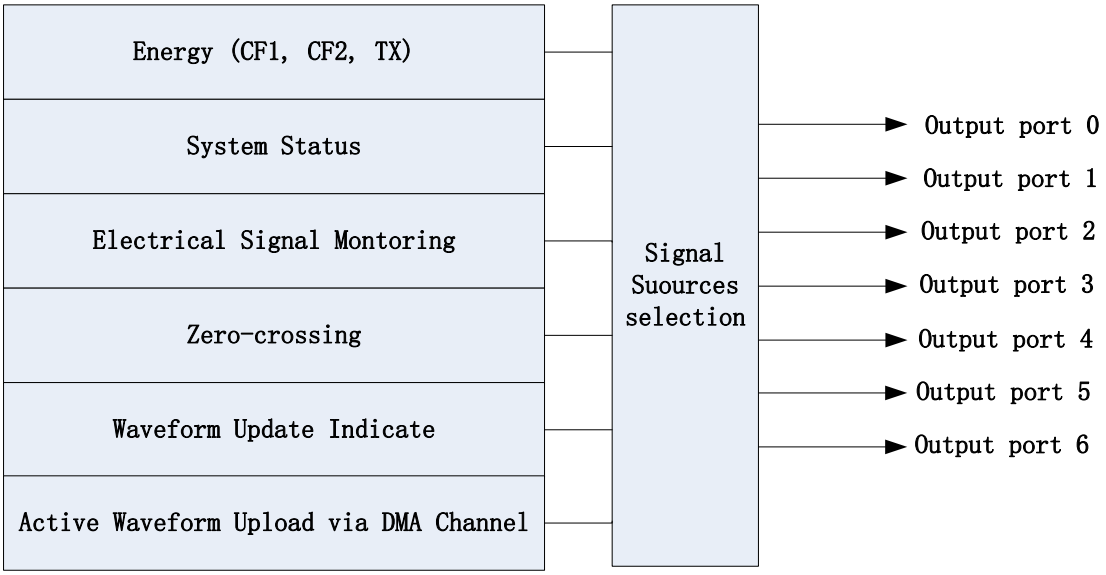

Figure 29-8 Functional Block Diagram of signal IO ports

Description:

1) When the output port is used as the CF output, it is supported to set the width of the output pulse and select the output polarity. When the output period is less than twice the CF output pulse width, CF is output at a duty cycle of 50%. For example, if the output width is 80ms and the output period is less than 160ms, it will be output according to the duty cycle of 50%.

2) Using the UART protocol when the TX output for energy upload.

3) When used as the interrupt event output port, the output port defaults to low level output. If the event occurs, it outputs a high level until the user clears the event flag bit, and the output state returns to the default level.

4) When used as a zero-crossing square wave output, the output port defaults to a low-level output. If configured as a positive zero-crossing, the IO port flips when the signal transitions from a negative signal to a positive signal.

5) When used as a DMA output port, the SPI protocol is required, and the user is required to select the SPLK, SPDO, and SOCS ports.

30. Outline Dimensions

30.1. Outline Dimensions_V9430

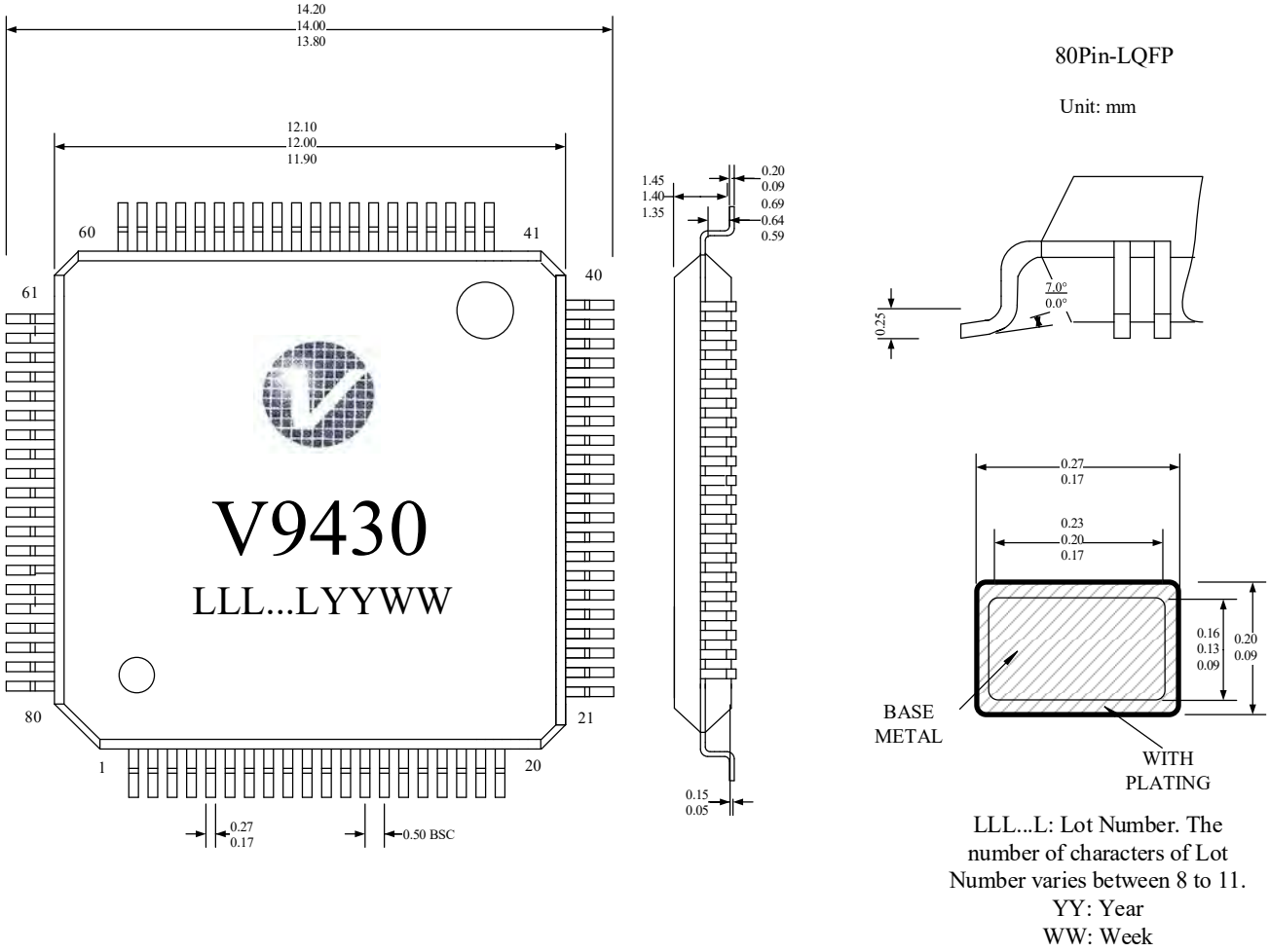

LLL...L: Lot Number. The number of characters of Lot Number varies between 8 to 11.
YY: Year
WW: Week